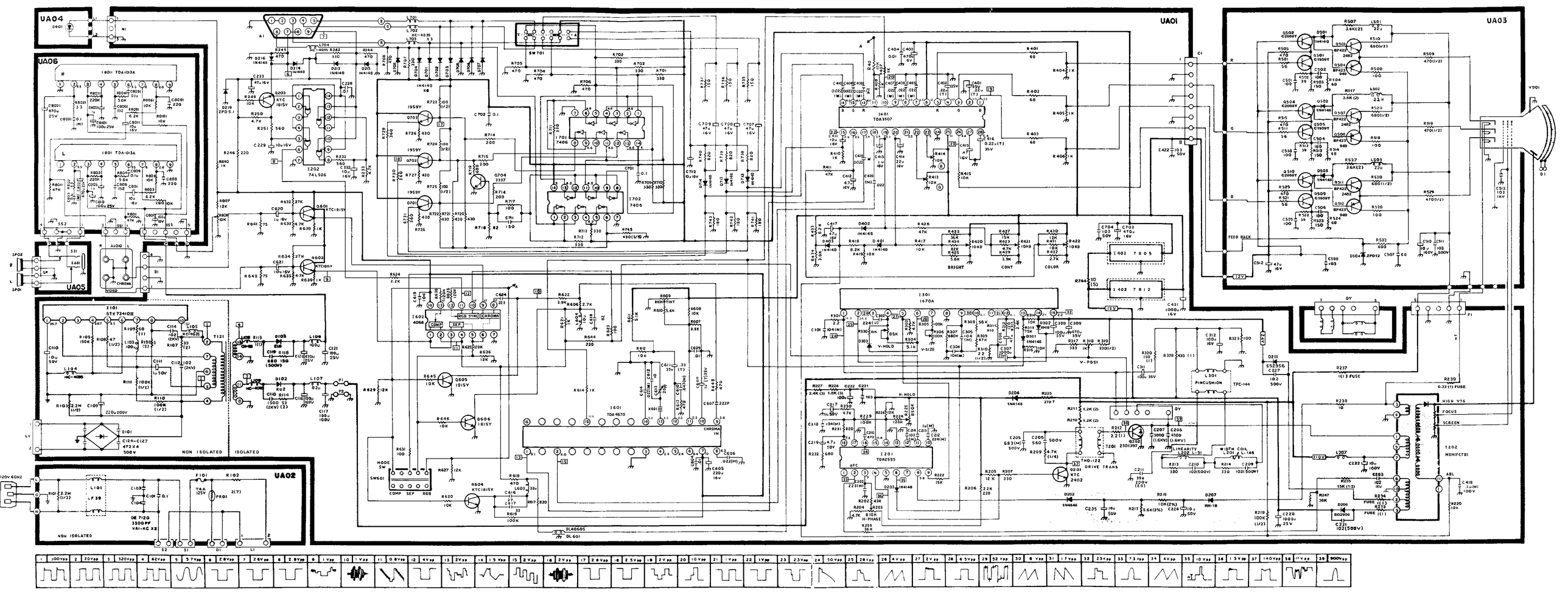
UA04
UA06
UA05
UA02
UA01
UA03
I801 TDA1013A
I202 74LS06
I701 7406
I702 7406
I401 TDA3507
I301 1670A
I601 TDA4570
I201 TDA2595
I101 STK7341011
I602 4066
I402 7812
I403 7805
V-HOLD
V-SIZE
V-POSI
BRIGHT
CONT
COLOR
H-HOLD
H-PHASE
AFC
LINEARITY
WIDTH COIL
PINCUSHION
DRIVE TRANS
FEED BACK
HIGH VTG
FOCUS
SCREEN
NON ISOLATED
ISOLATED
120V 60HZ
DY
V901
D1
T202 MSHIFCTBI
T121
T201 THD-122
T301 TPC-144
L301
L207
L502
L503
L601
L701
L702
L704
L801
L101
L104
L107
L202
L203
L204
L205
L206
L209
L210
L211
L212
L213
L214
L301
L401
L402
L403
L404
L405
L406
L407
L408
L409
L410
L411
L412
L413
L414
L415
L416
L417
L418
L419
L420
L421
L422
L423
L424
L425
L426
L427
L428
L429
L430
L431
L432
L433
L434
L435
L436
L437
L438
L439
L440

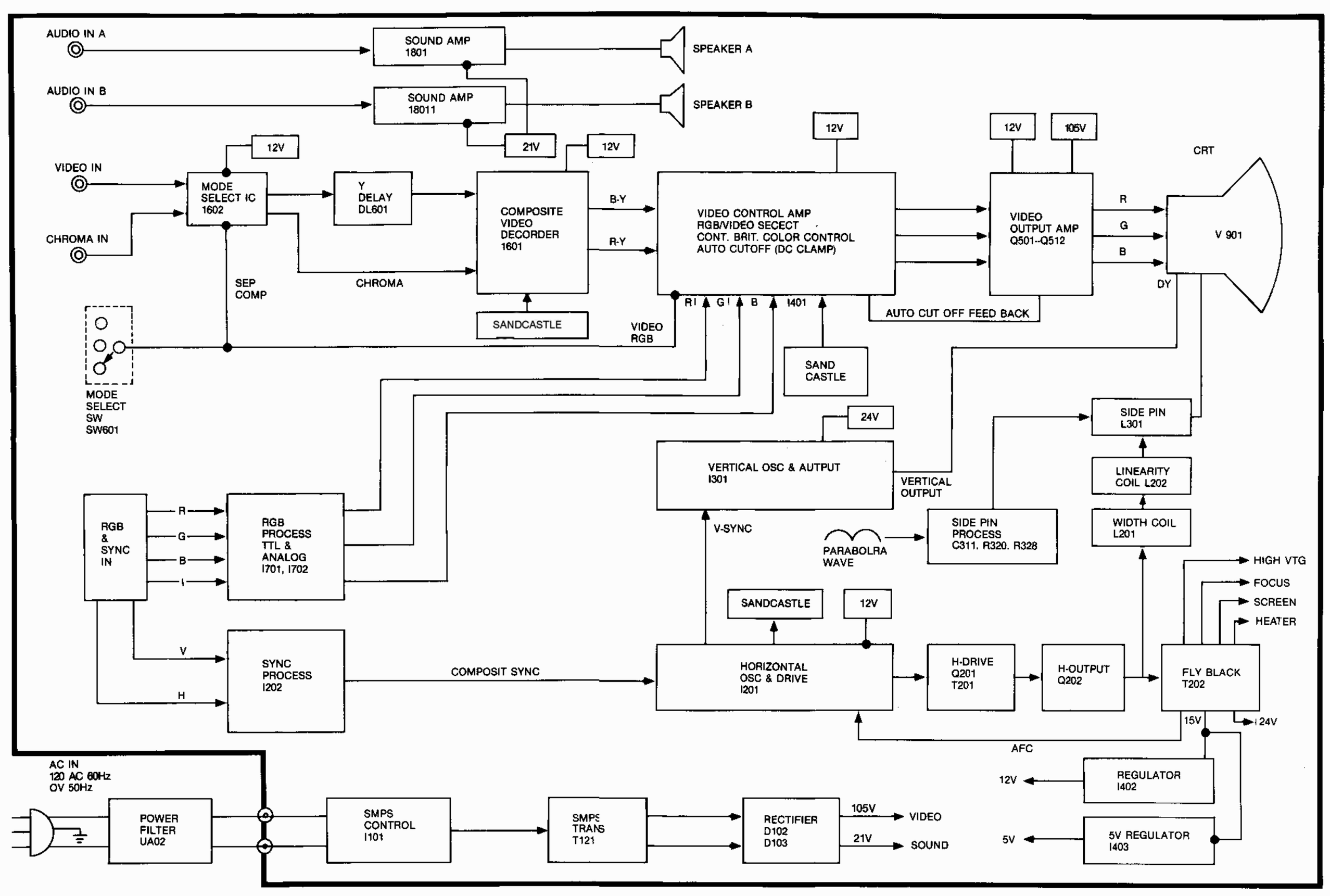
AUDIO IN A
SOUND AMP 1801
SPEAKER A
AUDIO IN B
SOUND AMP 18011
SPEAKER B
21V
12V
VIDEO IN
CHROMA IN
MODE SELECT IC 1602
Y DELAY DL601
COMPOSITE VIDEO DECORDER 1601
B-Y
R-Y
VIDEO CONTROL AMP RGB/VIDEO SECECT CONT. BRIT. COLOR CONTROL AUTO CUTOFF (DC CLAMP)
12V
105V
VIDEO OUTPUT AMP Q501--Q512
R
G
B
CRT
V 901
DY
SEP COMP
CHROMA
SANDCASTLE
VIDEO RGB
RI
GI
B
I401
AUTO CUT OFF FEED BACK
SAND CASTLE
MODE SELECT SW SW601
24V
SIDE PIN L301
LINEARITY COIL L202
WIDTH COIL L201
VERTICAL OSC & AUTPUT I301
VERTICAL OUTPUT
V-SYNC
PARABOLRA WAVE
SIDE PIN PROCESS C311. R320. R328
RGB & SYNC IN
RGB PROCESS TTL & ANALOG I701, I702
HIGH VTG
FOCUS
SCREEN
HEATER
SANDCASTLE
12V
SYNC PROCESS I202
COMPOSIT SYNC
HORIZONTAL OSC & DRIVE I201
H-DRIVE Q201 T201
H-OUTPUT Q202
FLY BLACK T202
15V
24V
AFC
AC IN 120 AC 60Hz OV 50Hz
POWER FILTER UA02
SMPS CONTROL I101
SMPS TRANS T121
RECTIFIER D102 D103
105V
VIDEO
21V
SOUND
12V
REGULATOR I402
5V
5V REGULATOR I403

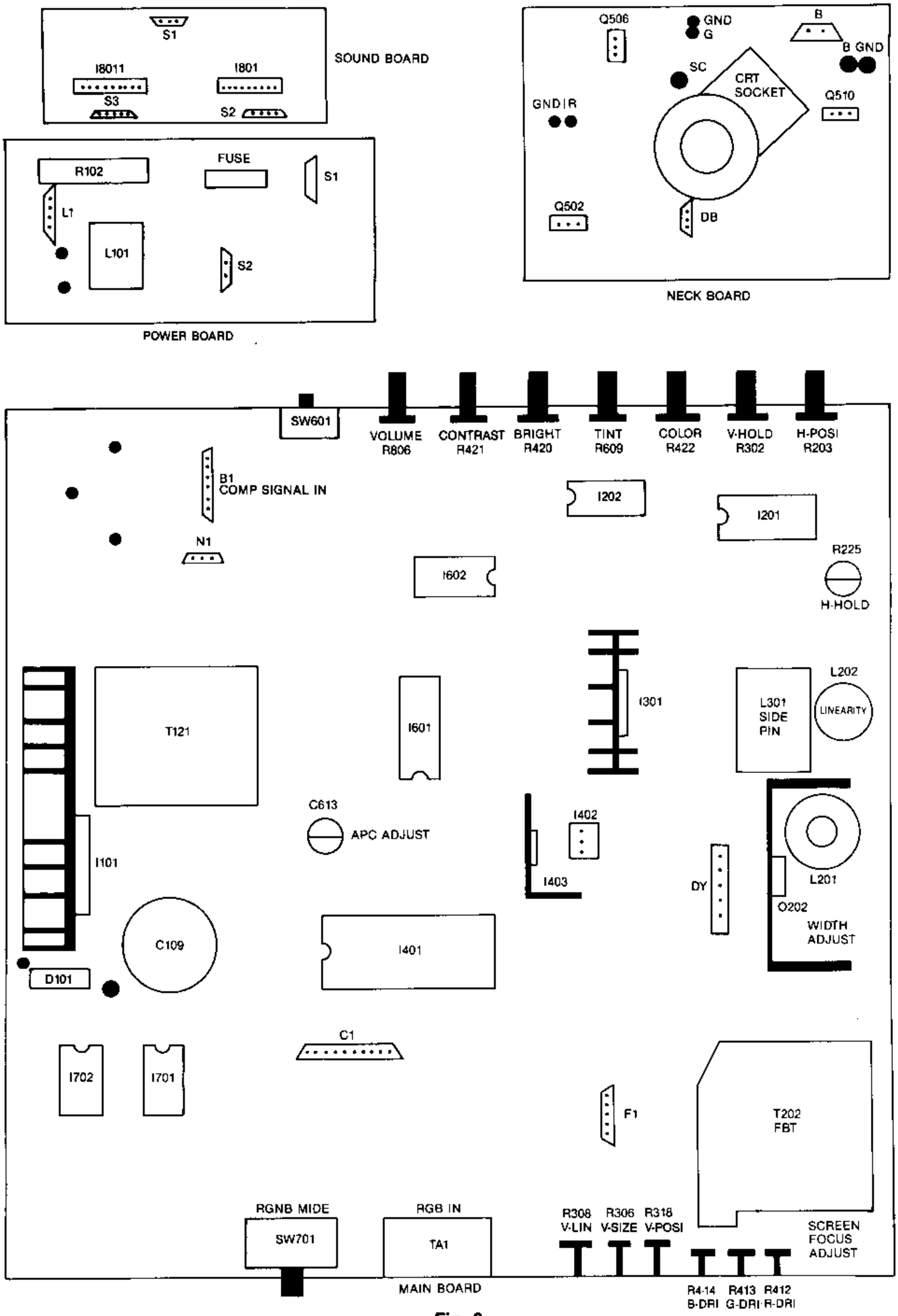
S1
I8011
I801
S3
S2
SOUND BOARD
R102
FUSE
S1
L1
L101
S2
POWER BOARD
Q506
GND
G
B
B GND
SC
CRT
SOCKET
Q510
GND R
Q502
DB
NECK BOARD
SW601
VOLUME
R806
CONTRAST
R421
BRIGHT
R420
TINT
R609
COLOR
R422
V-HOLD
R302
H-POSI
R203
B1
COMP SIGNAL IN
I202
I201
N1
R225
H-HOLD
I602
I301
L202
L301
SIDE
PIN
LINEARITY
T121
I601
C613
APC ADJUST
I402
I403
I101
DY
L201
O202
WIDTH
ADJUST
C109
I401
D101
C1
I702
I701
F1
T202
FBT
RGNB MIDE
SW701
RGB IN
TA1
MAIN BOARD
R308
V-LIN
R306
V-SIZE
R318
V-POSI
SCREEN
FOCUS
ADJUST
R4-14
B-DRI
R413
G-DRI
R412
R-DRI

Fig. 2