REVISIONS

LTR	ZONE	DESCRIPTION	DATE	APPROVED
A		PRODUCTION RELEASE	9-13-83	[signature]

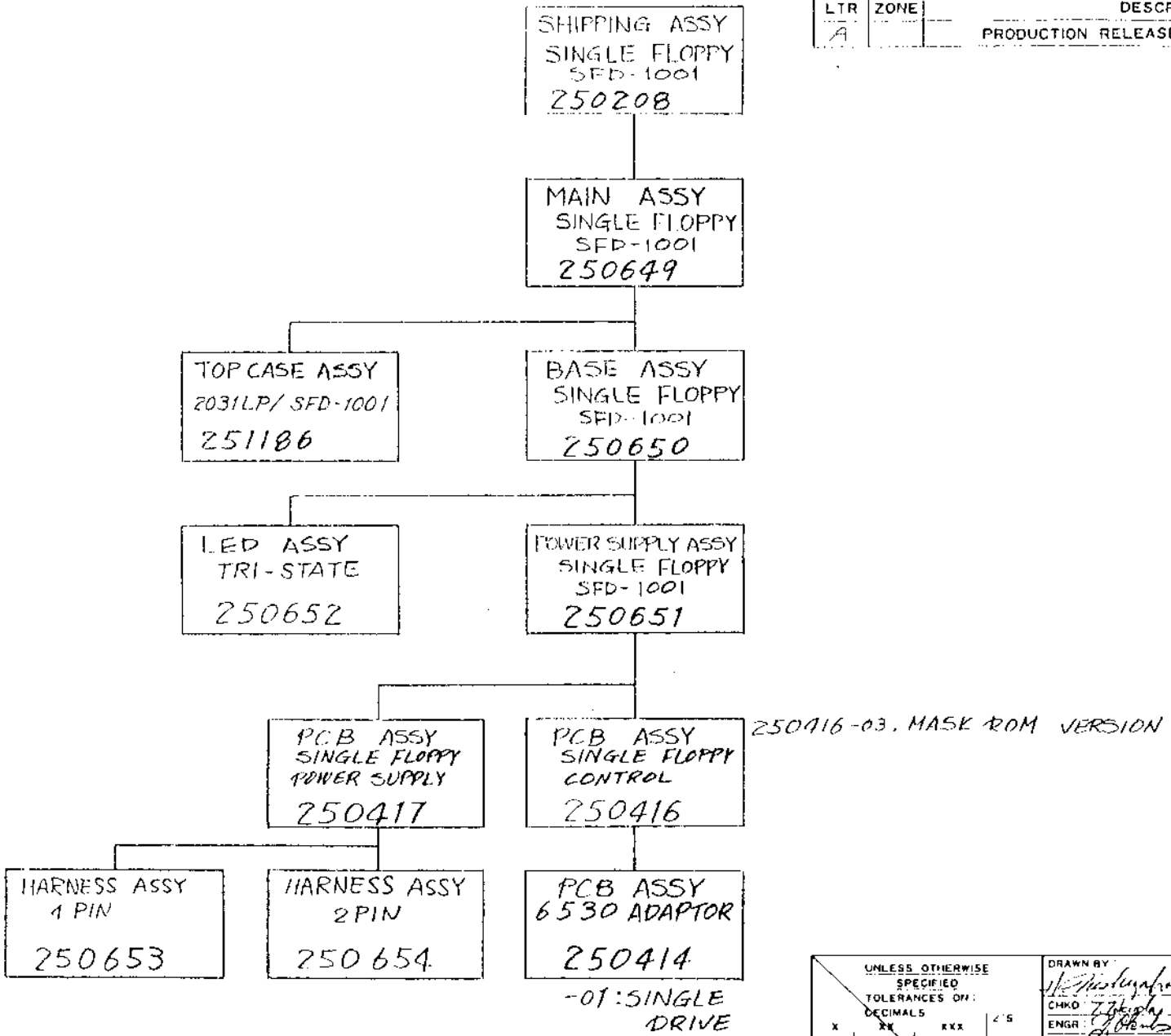

UNLESS OTHERWISE SPECIFIED
TOLERANCES ON:
DECIMALS
X XX XXX ∠'S

		DATE
DRAWN BY	[signature]	6/16/83
CHKD	[signature]	6/17/83
ENGR	[signature]	6/17/83
APPR	[signature]	9/15/83

MATERIAL:

FINISH:

USED ON: SINGLE FLOPPY SFD-1001

NEXT ASSY:

commodore

DRAWING TREE
SINGLE FLOPPY
SFD-1001

SIZE B | 250006 | REV A

SCALE NONE | SHEET 1 OF 1

THIRD ANGLE SYSTEM DIMENTION : mm

PART NO.	DESCRIPTION	
250208-01	SHIPPING ASSY, SINGLE FLOPPY SFD-1001	UL
-02		CSA
-03		JIS
-04		VDE
250208-05	SHIPPING ASSY, SINGLE FLOPPY SFD-1001	BSI

REVISIONS

LTR	ZONE	DESCRIPTION	DATE	APPROVED
A		PRODUCTION RELEASE	9-13-83	[signature]
B		REVISED PER ECO 840013	1-30-88	[signature]

1. SHEET 4 OF 5 SIZE C, 5 OF 5 SIZE
ASSY DWG
NOTES-UNLESS OTHERWISE SPECIFIED:

commodore	TITLE SHIPPING ASSY, SINGLE FLOPPY SFD-1001	DRAWN BY Y. Utsunomiya / CHKD T. Ichida	DATE 6/16/83 / 6/17/83	ENGR [signature] / APPR [signature]	DATE 6/17/83 / 6/17/83	SIZE B	DRAWING NUMBER 250208 SHEET 1 OF 5

QUANTITY REQD PER PART/DASH NO. 05	04	03	02	01	ITEM	DS	PART NUMBER	DESCRIPTION	REF DES	BEND	NOTES
				1	1	B/C	250649 -01	MAIN ASSY, SINGLE FLOPPY SFD-1001 UL			
			1		2		-02	CSA			
		1			3		-03	JIS			
	1				4		-04	VDE			
1					5	B/C	250649 -05	MAIN ASSY, SINGLE FLOPPY SFD-1001 BSI			
					6						
					7						
					8						
					9						
1	1	1	1	1	10	B	251398 -01	DISKETTE DEMO			
					11						
					12						
					13						
1	1	1	1	1	14	B	320972 -01	USER REFERENCE MANUAL			ENGLISH
					15						
					16						
		1			17	B	251400 -02	WARRANTY CARD JAPANESE			
				1	18	B	251400 -01	WARRANTY CARD ENGLISH			
					19						
		1			20	B	1001031 -01	ENVELOPE FOR WARRANTY			
					21						
		1			22	B	903508 -10	POWER CORD INTERNATIONAL (JIS)			
			1	1	23		-04	(UL, CSA)			
	1				24		-08	(VDE)			
1					25	B	903508 -09	POWER CORD INTERNATIONAL (BSI)			
					26						
					27						
1	1	1	1	1	28	B	1540025 -01	POLY BAG □ 315 x 550 x 0.04			FOR MAIN
1	1	1	1	1	29	B	4022044 -02	POLY BAG □ 90 x 250 x 0.04			FOR POWER CORD
1	1	1	1	1	30	B	251417 -01	POLY BAG □ 200 x 280 x 0.04			FOR USER MANUAL
					31						
1	1	1	1	1	32	C	251458 -01	STYLE FORM, RIGHT			
1	1	1	1	1	33	C	251459 -01	STYLE FORM, LEFT			
					34						
1	1	1	1	1	35	B	251301 -01	INNER CARTON, SFD-1001			
					36						
1/4	1/4	1/4	1/4	1/4	37	B	251302 01	OUTER CARTON, SFD-1001			
					38						

commodore	TITLE SHIPPING ASSY, SINGLE FLOPPY SFD-1001	DRAWN BY Y. Utsunomiya / CHKD T. Ishida	DATE 6/16/83 / 6/17/83	ENGR [signature] / APPR T. Hatsuhoto	DATE 6/17/83 / 6/13/83	SIZE B	DRAWING NUMBER 250208 SHEET 2 OF 5	REV B

QUANTITY REQD PER PART DASH NO. 05 04 03 02 01	ITEM	DS	PART NUMBER	DESCRIPTION	JOF DES	BEND	NOTES
	39						
	40						
	41						
½	42	B	255013 -01	LABEL, DESTINATION (UL)			
½	43	↓	-02	(CSA)			
½	44	↓	-03	(JIS)			
½	45	↓	-04	(VDE)			
½	46	B	255013 -05	LABEL, DESTINATION (BSI)			
	47						
	48						
	49						
1 1 1 1 1	50	B	251171 -01	DUMMY DISKETTE			
	51						
½	52	B	255025 -01	LABEL, SERIAL NO. (UL)			
½	53	↓	-02	(CSA)			
½	54	↓	-03	(JIS)			
½	55	↓	-04	(VDE)			
½	56	B	255025 -05	LABEL, SERIAL NO. (BSI)			
	57						
	58						
	59						
	60						
	61						
	62						
	63						
	64						
	65						
	66						
	67						
	68						
	69						
	70						
	71						
	72						
	73						
	74						
	75						
	76						

commodore

TITLE: SHIPPING ASSY, SINGLE FLOPPY SFD-1001

DRAWN BY: Y. Utsunomiya DATE: 5/16/83
CHKD: T. Ikuta 5/19/83
ENGR: APPR T. Matsumoto DATE: 5/13/83

SIZE: B

DRAWING NUMBER: 250208
SHEET 3 OF 5

REV: B

REVISIONS				
LTR	ZONE	DESCRIPTION	DATE	APPROVED
		SEE SHEET 1		

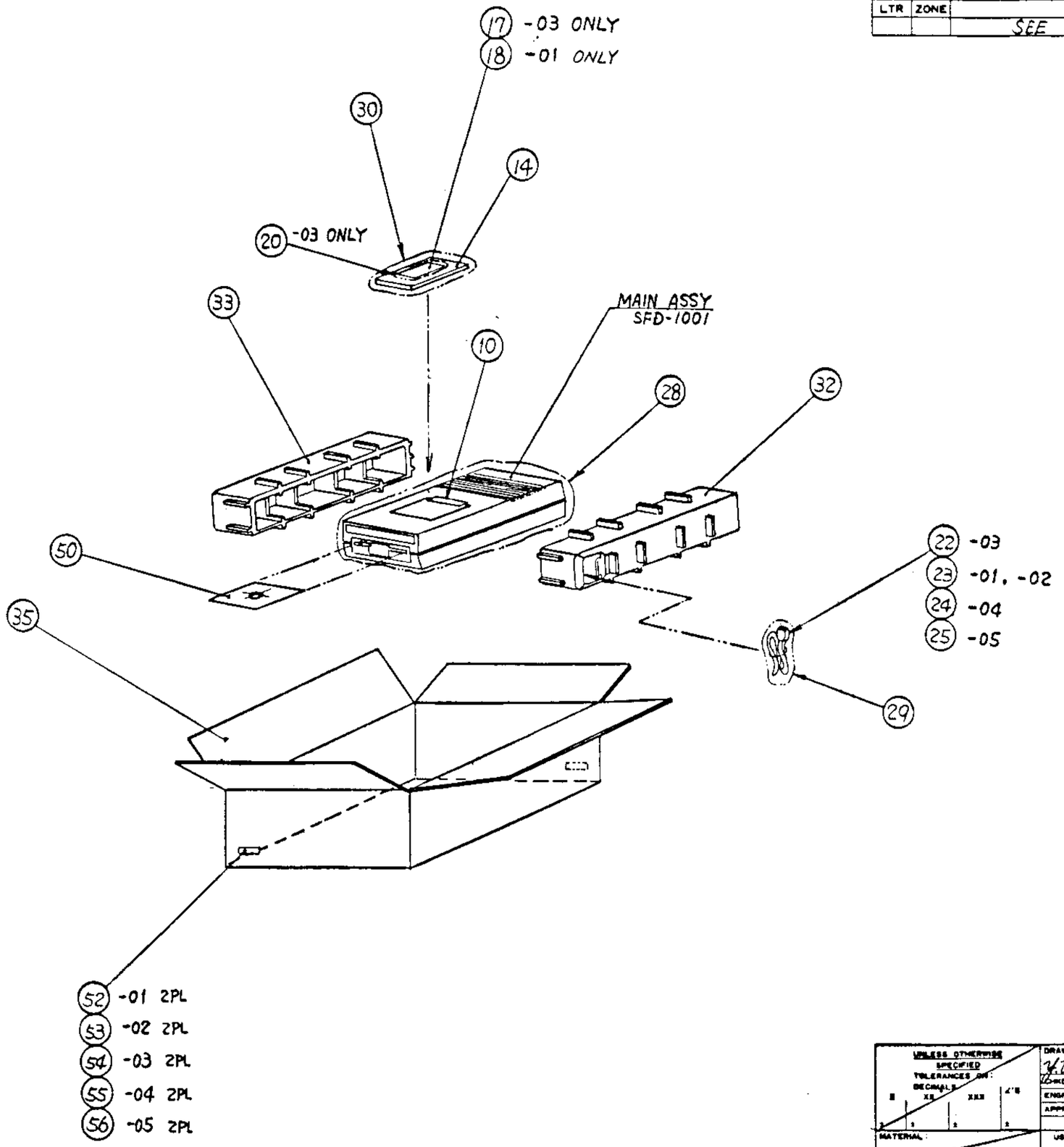

UNLESS OTHERWISE SPECIFIED
TOLERANCES ON:
DECIMALS
X XX XXX ±'S

MATERIAL:

FINISH:

DRAWN BY:	DATE
Y. Utsunomiya	9/27/83
CHKD:	9-13-83
ENGR: T. Tokuda	9/13/83
APPR:	9-13-83

USED ON: SFD-1001

NEXT ASSY:

commodore

SHIPPING ASSY,
SINGLE FLOPPY SFD-1001

SIZE C | 250208 | REV B

SCALE NONE | SHEET 4 OF 5

THIRD ANGLE SYSTEM. DIMENTION mm

PART NO.	DESCRIPTION
250414-01	PCB ASSY, 6530 ADAPTOR SFD-1001
250414-02	PCB ASSY, 6530 ADAPTOR 8250LP

(Fold Here)

DWG NO 250414

TITLE PCB ASSY, 6530 ADAPTOR

REVISIONS

LTR	ZONE	DESCRIPTION	DATE	APPROVED
A		PRODUCTION RELEASE	9-13-83	

1. SHEET 3 & 4 OF 4 SIZE B.
ASSY DWG
NOTES-UNLESS OTHERWISE SPECIFIED:

commodore	DRAWN BY	DATE	ENGR		SIZE	SHEET
	K. Maruyama	6/16/83		6/17/83	B	1 OF 4
	CHKD T. L.	6/17/83	APPR.	9/13/83		

QUANTITY REQD PER PART / DASH NO. 02	QUANTITY REQD PER PART / DASH NO. 01	ITEM	DS	PART NUMBER	DESCRIPTION	REF DES	BEND	NOTES
		1						
	1	2	B	251232	PCB 6530 ADAPTOR			
	AR	3	B	251462	PCB 6530 ADAPTOR ARTWORK			
		4						
		5						
1	1	6	B	901885-04	IC 6530 TIA	U1		
	1	7	B	251251-03	" 2716 EP ROM	U2		
1	1	8	B	901521-02	IC 74LS04 INV	U3		
1		9	B	251474-02	IC EP ROM FOR 8250 CONTROLLER	U2		2516, 2716, 2732 ARE ALL AVAILABLE EP ROM
S	S	10	B	901521-30	IC 74LS14 INV	U3		
		11						
1	1	12	B	604150-04	SOCKET IC LOWPROFILE 24PIN			
1	1	13	B	604150-06	SOCKET IC LOWPROFILE 40PIN			
		14						
		15						
		16						
1	1	17	B	325534-06	HEADER ASSY 40PIN	P1		YAMAICHI
		18						
		19						
		20						
	AR	21	B	251252-01	SCHEMATIC DIAGRAM			6530 ADAPTOR
		22						
		23						
		24						
AR		25	B	251252-02	SCHEMATIC DIAGRAM			6530 ADAPTOR FOR 8250-LP
		26						
1		27	B	251457	PCB 6530 ADAPTOR 8250LP			
AR		28	B	251475	PCB 6520 ADAPTOR 8250LP ARTWORK			
		29						
		30						
		31						
		32						
		33						
		34						
		35						
		36						
		37						

commodore

TITLE: PCB ASSY, 6530 ADAPTOR

DRWN BY: K. Maruyama	DATE 6/6/83	ENGR:	DATE
CHKD: [illegible]	DATE 6/7/83	APPR: [illegible]	DATE 7/5/83

SIZE B | 250414 | REV A | SHT 3/4

ADVANCED REPRO

PART NO.	DESCRIPTION
250416-01	PCB ASSY, SINGLE FLOPPY CONTROL
-02	N/A
250416-03	PCB ASSY, SINGLE FLOPPY CONTROL (USED MASK-5044 6530 ADAPTOR)

DWG NO 250416

TITLE PCB ASSY, SINGLE FLOPPY CONTROL

REVISIONS

LTR	ZONE	DESCRIPTION	DATE	APPROVED
A		PRODUCTION RELEASE	7-13-83	J Shibamoto
B		REVISED PER ECO 840007	1-12-84	J Shibamoto

1. SHEET 9, 10 OF 10 C SIZE
ASSY DWG
NOTES-UNLESS OTHERWISE SPECIFIED:

commodore	DRAWN BY J. Shibamoto	6/16/83	ENGR J. Shibamoto	6/17/83	SIZE 8	SHEET 1 OF 10
	CHKD T. Tokuda	6/17/83	APPR T. Tokuda	6/17/83		

QUANTITY REQD PER PART / DASH NO. 03	02	01	ITEM	DS	PART NUMBER	DESCRIPTION			REF DES	BEND	NOTES
4		4	1	B	901521-01	IC	74LS00	NAND	1D,4I,9C,9E,		
4		4	2		-21		74LS02	NOR	1C,4A,5I,11F		
2		2	3		-02		74LS04	INV	7E, 7I		
2		2	4		-03		74LS08	AND	1H, 4G		
1		1	5		-24		74LS10	3 INPUT NAND	10F		
1		1	6		-30		74LS14	INV	11E		
2		2	7		-17		74LS42	1 OF 10 DECODER	3G, 4H		
2		2	8		-06		74LS74	D FLIP FLOP	7B,11H		
1		1	9		-32		74LS86	Z-EX-OR	9D		
1		1	10		-15		74LS133	13 INPUT NAND	2D		
1		1	11		-25		74LS153	4 INPUT MAX	7F		
7		7	12		-11		74LS157	2 INPUT MAX	3C,3D,4C,5G,5H	6G,	6H
1		1	13		-33		74LS163		2G		
2		2	14		-28		74LS164	SIPO REG	5B, 6B		
1		1	15		-12		74LS165	PISO REG	6E		
1		1	16		-34		74LS175		10G		
2		2	17		-35		74LS194		6F, 9F		
1		1	18		901521 -27		74LS190		2C		
1		1	19		901522 -06		7406	INV BUFFER	4D		
1		1	20		-19		7414	INV	8I		
1		1	21		-01		7417	BUFFER	9I		
1		1	22		-09		7438	NAND O.C	9B		
1		1	23		901522 -39		7445	DECODER	10B		
1		1	24		901525 -04		74S00	NAND	10H		
1		1	25		901523-01		LM555	TIMER	11J		
1		1	26		901523-10		LF353		2A		
3		3	27		901524-01		MC3446	BUS INTERFACE	8J, 9J, 10J		
1		1	28		901502-01		4066	CMOS SWITCH	3A		MOTOROLA, MITSUBISHI ONLY
1		1	29		901510-01		9602		7C		
1		1	30		251098-01		HA16631P	FDC READ AMP	10A		
1		1	31	B	251101-01	IC	M001WT		11B		
			32								
2		2	33	B	251099-01	IC	75477	DRIVER	11C, 11D		
			34								
S		S	35	B	901521-01	IC	74LS00	NAND	10H		SUBSTITUTE FOR ITEM 24
S		S	36	B	901521-30	IC	74LS14	INV	8I		SUBSTITUTE FOR ITEM 20
S		S	37	B	901522-12	IC	74145	DECODER	10B		SUBSTITUTE FOR ITEM 23

commodore	TITLE: PCB ASSY, SINGLE FLOPPY CONTROL	DRWN BY: Y. Shibanoto	DATE 6/16/83	ENGR:	DATE	SIZE B	250416	REV B	SHT 2/10
		CHKD: T. Tokuda	6/19/83	APPR: T. Matsukura	9/13/83				

ADVANCED REPRO

QUANTITY REQD PER PART / DASH NO. 03	02	01	ITEM	DS	PART NUMBER	DESCRIPTION	REF DES	BEND	NOTES
S		S	38	B	901435-02	IC 6502-A MPU	1E, 2H		SUBSTITUTE FOR ITEM 43
S		S	39		901435-03	6502-B MPU	1E, 2H		SUBSTITUTE FOR ITEM 43
1		1	40		901437-01	6522 VIA	5E		
		1	41		251256-01	6530-049			
2		2	42		901459-01	[illegible] PIA	4J, 6J		
2		2	43	B	901435-01	IC 6502 MPU	1E, 2H		
			44						
			45						
			46						
1		1	47	B	901467-01	IC 6316 MASK ROM	5C		
			48						
			49						
			50						
			51						
			52						
1		1	53	B	901887-01	IC 2364-118 MASK ROM	1J		$C000~$DFFF
			54						
			55						
			56						
			57						
			58						
1		1	59	B	901888-01	IC 2364-119 MASK ROM	3J		$E000~$FFFF
			60						
			61						
			62						
			63						
			64						
S		S	65	B	325502-08	IC HM6116P-4 RAM	7G, 9G		SUB STITUTE FOR ITEM 67
S		S	66	B	325502-07	IC TMM2016P-2 RAM	7G, 9G		SUB STITUTE FOR ITEM 67
2		2	67	B	325502-01	IC M5M5125P RAM	7G, 9G		
			68						
			69						
			70						
			71						
			72						
			73						
			74						

commodore

TITLE: PCB ASSY, SINGLE FLOPPY CONTROL

DRWN BY: Y. Shiramoto DATE: 6/16/83
CHKD: T. Tokuda 6/17/83
ENGR: DATE:
APPR: T. Nakajima 5/11/83

SIZE: B | 250416 | REV: B | SHT: 3/10

ADVANCED REPRO

QUANTITY REQD PER PART / DASH NO. 03	02	01	ITEM	DS	PART NUMBER	DESCRIPTION	REF DES	BEND	NOTES
5		5	75	B	902693-01	TRANSISTOR NPN 2SC1815	Q1-Q3,Q5,Q6		
1		1	76	B	902744-01	TRANSISTOR PNP 2SA1015	Q4		
			77						
S		S	78	B	902671-01	TRANSISTOR NPN 2SC945	Q1-Q3,Q5,Q6		NEC SUB STITUTE FOR ITEM 75
S		S	79	B	902717-01	TRANSISTOR PNP 2SA733	Q4		NEC SUB STITUTE FOR ITEM 76
			80						
			81						
			82						
4		4	83	B	900850-07	DIODE SIGNAL 1S953	CR1-CR3,CR5		NEC
S		S	84	B	900850-14	DIODE SIGNAL 1S1588	CR1-CR3,CR5		TOSHIBA SUB STITUTE FOR ITEM 83
S		S	85	B	900850-02	DIODE SIGNAL 1S2473	CR1-CR3,CR5		ROHM SUB STITUTE FOR ITEM 83
			86						
			87						
			88						
1		1	89	B	325506-01	DIODE ZENER 500mW 5.1±0.1V	CR4		
S		S	90	B	325506-02	DIODE ZENER	CR4		NEC RD5.1EB SUBSTITUTE FOR ITEM 89
			91						
			92						
			93						
4		4	94	B	251100-02	DIODE ARRAY 2 ELEMENT DAP-201	DA1-DA4		
			95						
			96						
			97						
			98						
			99						
			100						
			101						
			102					C50-	66,C71-73
56		61	103	B	251073-04	CAPACITOR CERAMIC 0.1uF/50V	C9,C12,C13,C16	C21-	24,C67-70,C74-102
1		1	104	B	251069-14	↑ 0.033uF/50V	C44		
			105						
14		14	106	B	251072-18	47PF/50V	C14,C31-C43		
2		2	107	B	251070-22	↓ 100PF/50V	C20,C29		
1		1	108	B	251070-24	CAPACITOR CERAMIC 150PF/50V	C19		
			109						
			110						
			111						

commodore	TITLE: PCB ASSY, SINGLE FLOPPY CONTROL	DRWN BY: Y. Shibamoto DATE 6/16/83 CHKD: T. Takuda 6/17/83	ENGR: DATE APPR: T. Matsumoto 7/5/83	SIZE B	250416	REV B	SHT 4/10

ADVANCED REPRO

QUANTITY REQD PER PART / DASH NO. 03	02	01	ITEM	DS	PART NUMBER	DESCRIPTION	REF DES	BEND	NOTES
1		1	112	B	251072-26	CAPACITOR CERAMIC 220PF/50V	C15		
1		1	113	B	251072-28	↑ CERAMIC 330PF/50V	C17		
1		1	114	B	251069-08	CERAMIC 0.01μF/50V	C45		
1		1	115	B	251072-27	CERAMIC 270PF/50V	C18		
			116						
1		1	117	B	251304-13	MONOLITHIC CERAMIC 120PF/50V±5%	C5		MURATA RPE 110 CH 121 J 50 P=2.5mm
1		1	118	↑	251304-14	↑ 150PF/50V±5%	C10		↑ RPE 110 CH 151 J 50 ↑
1		1	119		251304-17	270PF/50V±5%	C4		RPE 110 CH 271 J 50 ↓
1		1	120		251304-22	680PF/50V±5%	C11		RPE 110 CH 681 J 50 P=2.5mm
1		1	121	↓	251304-55	↓ 3300PF/50V±20%	C6		↓ RPE 110 C 332 M 50 P=5mm
9		4	122	B	251304-87	CAPACITOR MONOLITHIC CERAMIC 0.1μF/50V	C1-C3, C28		MURATA RPE 122F104Z50 P=5mm
			123				C67-C70, C74		
			124						
			125						
S		S	126	B	325549-04	CAPACITOR FILM 0.039μF/50V±5%	C27		SHINEI DEP 393J, SUBSTITUTE FOR ITEM 127
1		1	127	B	325549-03	CAPACITOR FILM 0.039μF/50V±5%	C27		NICHICON TDY-1H-393J P=5mm
			128						
			129						
1		1	130	B	900410-04	CAPACITOR TANTALUM 1μF/16V	C46		NEC DAIC010M
2		2	131	B	900402-03	CAPACITOR TANTALUM 4.7μF/25V	C7, C8		NEC CS15E4R7M1S
			132						
			133						
2		2	134	B	900100-25	CAPACITOR ELEC. LOW LEAK 10μF/16V	C48, C49		MARCON CEUSMIC100
2		2	135	B	900100-40	CAPACITOR ELEC 100μF/16V	C25, C26		↕ CEUSMIC101
1		1	136	B	900100-51	CAPACITOR ELEC 220μF/10V	C47		MARCON CEUSM1A221
			137						
1		1	138	B	251029-02	CAPACITOR TRIMMER 120PF/50V	VC1		MURATA TZ03R121E
			139						
			140						
			141						
1		1	142	B	251068-51	RESISTOR CARBON 1/4W, ±5% 100Ω	R14		RADIAL FORMING
3		3	143	B	↑ -55	↑ ↑ 150Ω	R49, R50, R53		↑
2		2	144	B	-71	680Ω	R36, R37		
5		5	145	B	-76	1KΩ	R21, R27, R57-R59		
7		7	146	B	↓ -83	↓ ↓ 2KΩ	R22, R41, R42	R55	R56, R61, R62 ↓
7		7	147	B	251068-84	RESISTOR CARBON 1/4W, ±5% 2.2KΩ	R7, R8, R10, R34, R35	R39	R43 RADIAL FORMING
			148						

commodore	TITLE: PCR ASSY, SINGLE FLOPPY CONTROL	DRWN BY: Y. Shibamato DATE 6/16/83 CHKD: T. Takuda 6/19/83	ENGR: APPR: T. Mashuda DATE 9/13/83	SIZE B	250416	REV B	SHT 5/10

ADVANCED REPRO

QUANTITY REQD PER PART / DASH NO. 03	02	01	ITEM	OS	PART NUMBER	DESCRIPTION	REF DES	BEND	NOTES
2		2	149	B	251068 - 85	RESISTOR CARBON 1/4W, ±5% 2.4kΩ	R68, R69		RADIAL FORMING
1		1	150	↑	- 86	2.7kΩ	R32		↑
3		3	151	↕	- 93	5.1kΩ	R63, R70, R71		↕
6		6	152	↕	-101	10kΩ	R13, R26, R30, R31	R38	R66
1		1	153	↕	-105	15kΩ	R23		↕
1		1	154	↕	-113	33kΩ	R33		↕
1		1	155	↕	-116	43kΩ	R46		↕
2		2	156	↕	-117	47kΩ	R12, R54		↕
1		1	157	↕	-123	82kΩ	R45		↕
1		1	158	↓	-126	100kΩ	R67		↓
2		2	159	B	251068 - 63	RESISTOR CARBON 1/4W, ±5% 330Ω	R64, R65		RADIAL FORMING
			160						
			161						
1		1	162	B	901600 - 45	RESISTOR CARBON 1/2W ±5% 4.8Ω	R60		RADIAL FORMING
			163						
			164						
2		2	165	B	251575 - 09	RESISTOR METAL OXIDE 1/4W ±1% 75Ω	R19, R29		RADIAL FORMING
1		1	166	↑	- 18	100Ω	R25		↑
1		1	167	↕	- 20	200Ω	R24		↕
1		1	168	↕	- 19	226Ω	R28		↕
1		1	169	↓	- 17	7.15kΩ	R44		↓
2		2	170		251575 - 48	1/4W ±1% 33.2kΩ	R47, R48		RADIAL FORMING
1		1	171		902180 - 06	RESISTOR METAL OXIDE 1W ±5% 110Ω	R40		AXIAL LEAD
			172						
1		1	173		251575 - 46	RESISTOR METAL OXIDE 1/4W ±1% 174Ω	R20		RADIAL FORMING
2		2	174		251575 - 15	RESISTOR METAL OXIDE 1/4W ±1% 4.99Ω	R3, R4		↕
1		1	175		251068 - 58	RESISTOR CARBON 1/4W ±5% 200Ω	R11		↕
2		2	176	↕	- 65	390Ω	R5, R6		↕
2		2	177	↓	- 67	470Ω	R15, R16		↓
2		2	178	B	251068 - 80	RESISTOR CARBON 1/4W, ±5% 1.5kΩ	R17, R18		RADIAL FORMING
			179						
			180						
1		1	181	B	251068 - 94	RESISTOR CARBON 1/4W, ±5% 5.1kΩ	R9		RADIAL FORMING
2		2	182	B	251068 - 95	RESISTOR CARBON 1/4W, ±5% 6.2kΩ	R1, R2		RADIAL FORMING
			183						
			184						
			185						

commodore

ADVANCED REPRO

TITLE: PCB ASSY, SINGLE FLOPPY CONTROL

DRWN BY:	DATE	ENGR:	DATE	SIZE		REV	SHT
Y. Shibamoto	6/16/83			B	250416	B	6/10
CHKD: T. Tokuda	6/17/83	APPR: T. MATSUDA	9/13/83				

QUANTITY REQD PER PART / DASH NO. 03	02	01	ITEM	OS	PART NUMBER	DESCRIPTION	REF DES	BEND	NOTES
1		1	186	B	902265-06	POT. METER 20kΩ	VR1		NOBLE VM6CK(PV)B 20kΩ
			187						
			188						
			189						
2		2	190	B	251126-33	COIL, INDUCTOR 100 uH	L3, L4		
2		2	191	B	251126-35	150uH	L1, L2		
1		1	192	B	325513-01	2.2uH	L6		
1		1	193	B	325513-03	COIL, INDUCTOR 100 uH	L5		
			194						
			195						
1		1	196	B	904150-04	SOCKET, IC LOW PROFILE 24 PIN	5C		
2		2	197	B	904150-05	SOCKET, IC LOW PROFILE 28 PIN	1J, 3J		
6		6	198	B	904150-06	SOCKET, IC LOW PROFILE 40 PIN	1E 3E 5E 2H 4J 6J		
			199						
			200						
16		16	201	B	325563-01	FERRITE BEAD	FB1-FB16		RADIAL FORMING
			202						
			203						
			204						
1		1	205	B	325562-03	HEADER ASSY SINGLE LINE 2.5 PITCH 3PIN	P3		MOLEX 3022-03A
1		1	206	B	251460-02	SINGLE LINE 3.96 PITCH 2PIN	P5		MOLEX 5274-02A
1		1	207	B	325520-04	SINGLE LINE 3.96 PITCH 4 PIN	P4		MOLEX 5273-04A
1		1	208	B	250415-10	DUAL IN LINE 2.54 PITCH 12 PIN	P2		
1		1	209	B	250415-11	HEADER ASSY DUAL IN LINE 2.54 PITCH 24 PIN	P1		
			210						
1		1	211	B	903206-02	CONNECTOR RT ANGLE IEEE-488 24 PIN	P7		MITSUMI CINCH M57-24-30-345
1		1	212	B	325566-08	CRYSTAL MODULE 12MHz, 100PPM	11G		KYOCERA KXO-12MHz 100PPM
1		1	213	C	251203	P.C. BOARD SINGLE FLOPPY CONTROL			GLASS EPOXY UL-94V-2 315 x 180 x 1.6t
REF		REF	214	B	251409-01	PCB. CONTROL ART WORK			FOR MASK ROM
			215						
2		2	216	B	251403-03	SCREW M3 SEMS PHILLIPS FAN HEAD			CONNECTOR RT ANGLE IEEE-488 (2) LG10
			217						
			218						
			219						
			220						
			221						
			222						

commodore

TITLE: PCB ASSY, SINGLE FLOPPY CONTROL

DRWN BY: Y. Shibanoto DATE 6/16/83
CHKD: T. Takeuchi 6/19/83
ENGR: DATE
APPR: T. Hattori 8/17/83

SIZE B | 250416 | REV B | SHT 7/10

ADVANCED REPRO

QUANTITY REQD PER PART / DASH NO. 03	02	01	ITEM	DS	PART NUMBER	DESCRIPTION	REF DES	BEND	NOTES
1			223	B	250414 -01	PCB ASSY, 6530 ADAPTOR	3E		
			224						
1			225	B	251407 -04	SPACER			NJRC 9550H00010 L = 6mm BP-976C
			226						
1			227	B	251403 -05	SCREW M3 SEMS PHILLIPS PAN HEAD			LG 14
			228						
			229						
1			230	B	905960-03	NUT, HEXAGON, METRIC			M3
			231						
1			232	B	251461 -01	WASHER, PLAIN			M3
			233						
			234						
			235						
REF		REF	236	D	251406-01	SCHEMATIC DIAGRAM			PCB ASSY CONTROL
			237						
			238						
			239						
			240						
			241						
			242						
			243						
			244						
			245						
			246						
			247						
			248						
			249						
			250						
			251						
			252						
			253						
			254						
			255						
			256						
			257						
			258						
			259						

commodore

TITLE: PCB ASSY, SINGLE FLOPPY CONTROL

DRWN BY: Y. Shibanoto	DATE 6/16/83	ENGR:	DATE
CHKD: T. Takeda	6/17/83	APPR: T. HATSUNAI	9/12/83

SIZE B | 250416 | REV B | SHT 8/10

ADVANCED REPRO

REVISIONS				
LTR	ZONE	DESCRIPTION	DATE	APPROVED
		SEE SHEET 1.		

CUT PIN LOCATION (3 PIN)

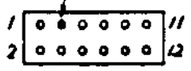

CUT PIN LOCATION (9 PIN)

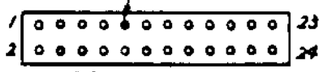

JUMPER CONNECTION

DASH	-01
ROM TYPE	2316
S2	SHORT
S3	OPEN

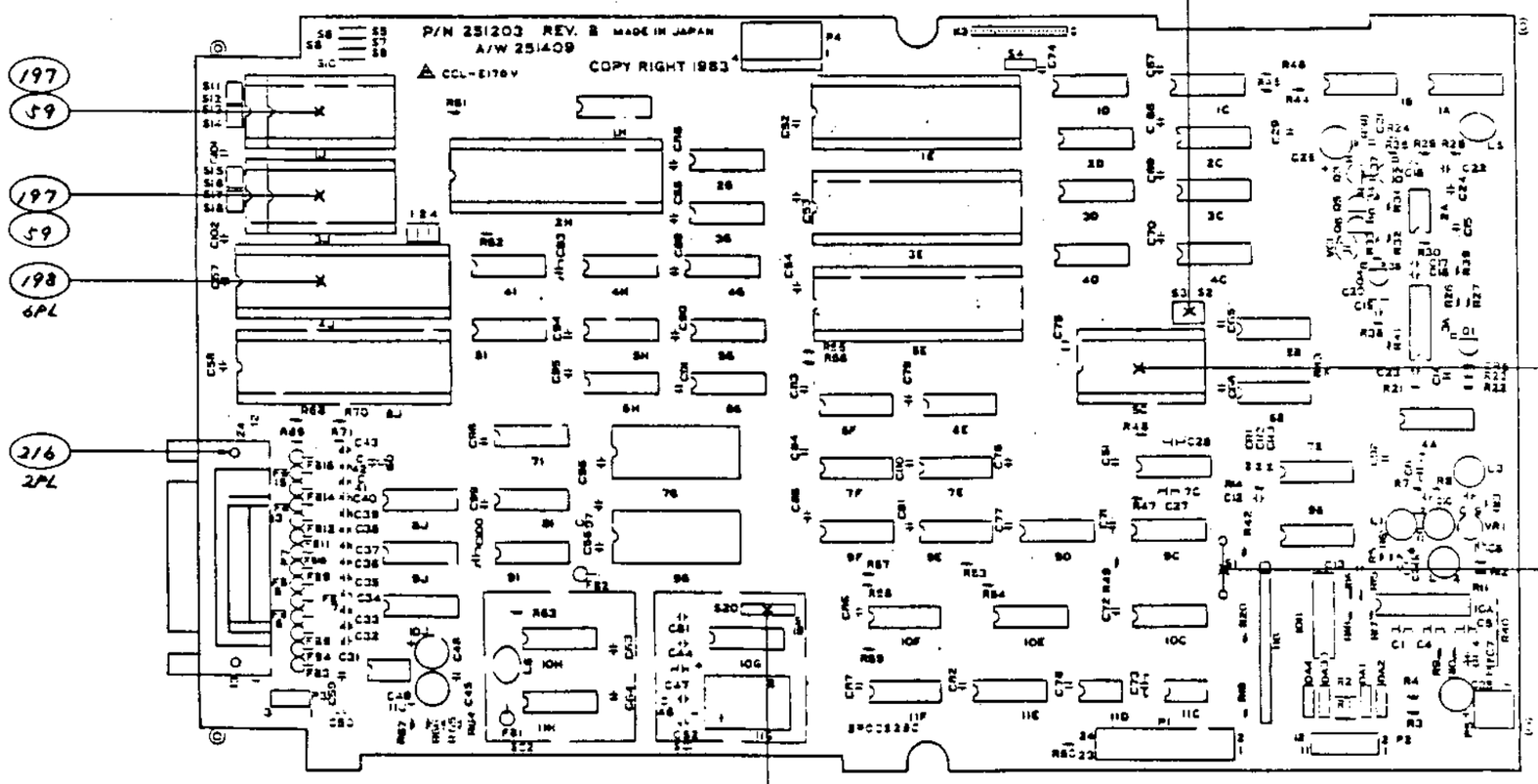

JUMPER CONNECTION

	SINGLE SIDED	DOUBLE SIDED
S1	OPEN	SHORT
S4	OPEN	SHORT

JUMPER CONNECTION TABLE

MODEL	S1	S2	S3	S4	S5-S18	S19	S20
SFD-1001	SHORT	SHORT	OPEN	SHORT		SHORT	OPEN

JUMPER CONNECTION

	4 MHz	6 MHz
S19	OPEN	SHORT
S20	SHORT	OPEN

-01 SHOWN

UNLESS OTHERWISE SPECIFIED TOLERANCES ON: DECIMALS X .XX .XXX ANGLES

MATERIAL

FINISH

	NAME	DATE
DRAWN BY	N. Hanawa	1-6-84
CHKD	H.N	1-9-84
ENGR	T.Ishida	1/10/84
APPR		

USED ON	NEXT ASSY
SFD-1001	250651

commodore

PCB ASSY, SINGLE FLOPPY CONTROL

SIZE C | 250416 | REV B

SCALE NONE | SHEET 9 OF 10

THIRD ANGLE SYSTEM DIMENSION: mm

REVISIONS				
LTR	ZONE	DESCRIPTION	DATE	APPROVED
		SEE SHEET 1		

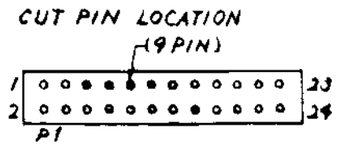

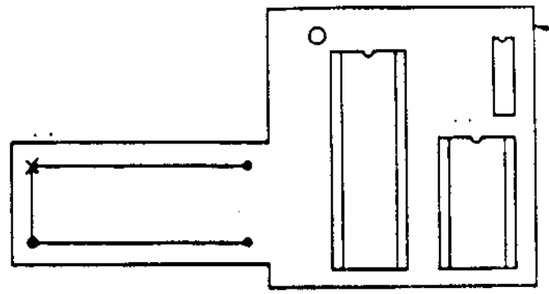

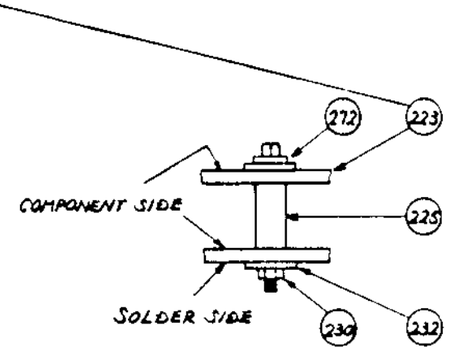

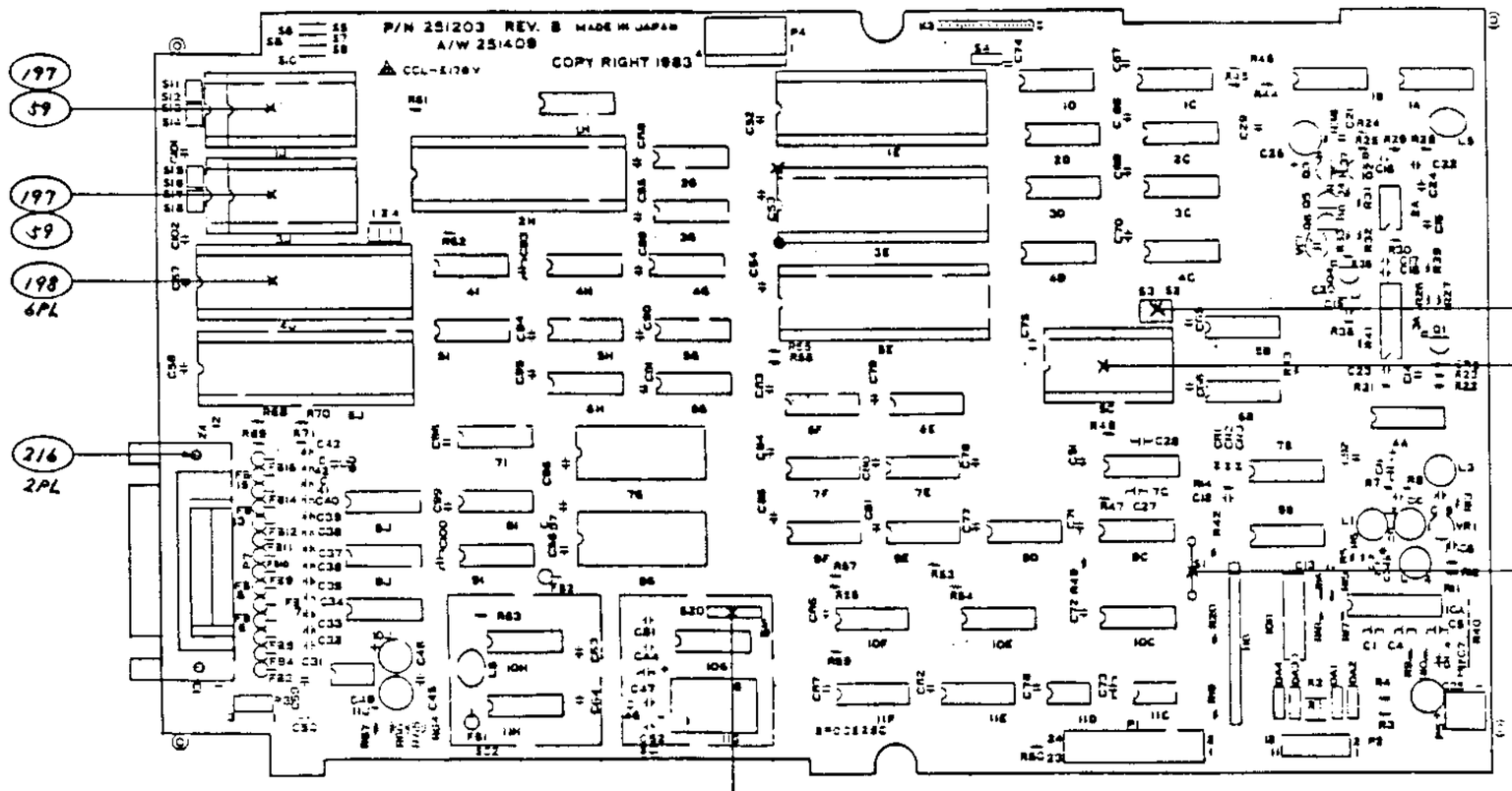

JUMPER CONNECTION

DASH	-03
ROM TYPE	2316
S2	SHORT
S3	OPEN

JUMPER CONNECTION

	SINGLE SIDED	DOUBLE SIDED
S1	OPEN	SHORT
S4	OPEN	SHORT

JUMPER CONNECTION TABLE

MODEL	S1	S2	S3	S4	S5-S18	S19	S20
SFD-1001	SHORT	SHORT	OPEN	SHORT		SHORT	OPEN

JUMPER CONNECTION

	4 MHz	6 MHz
S19	OPEN	SHORT
S20	SHORT	OPEN

-03 SHOWN

UNLESS OTHERWISE SPECIFIED TOLERANCES ON: DECIMALS X XX XXX ∠°B

MATERIAL

FINISH

DRAWN BY	DATE
N. Nanamura	1-6-'84
CHKD H.N. Y.H.	1-9-84
ENGR T. Nakuda	1/10/84
APPR	

USED ON | NEXT ASSY

commodore

PCB ASSY,
SINGLE FLOPPY CONTROL

SIZE C | 250416 | REV B

SCALE NONE | SHEET 10 OF 10

THIRD ANGLE SYSTEM DIMENSION mm

PART NO.	DESCRIPTION
250417-01	PCB ASSY, SINGLE FLOPPY POWER SUPPLY

(Fold Here)

DWG NO. 250417

TITLE PCB ASSY, SINGLE FLOPPY POWER SUPPLY

REVISIONS

LTR	ZONE	DESCRIPTION	DATE	APPROVED
A		PRODUCTION RELEASE	9-13-83	

1. SHEET 4 OF 4 SIZE C

ASSY DWG

NOTES-UNLESS OTHERWISE SPECIFIED:

commodore	DRAWN BY Y. Shibamoto	DATE 6/16/83	ENGR	6-17-83	SIZE B	SHEET 1 OF 4
	CHKD T. Tokuda	6/17/83	APPR T. Tokuda	9/15/83		

QUANTITY REQD PER PART / DASH NO. 01	ITEM	DS	PART NUMBER	DESCRIPTION	REF DES	BEND	NOTES
1	1	B	251202-01	PC BOARD POWER SUPPLY			PAPER EPOXY UL94V-2 (105x73x1.6t)
	2						
REF	3	B	251408-01	PC BOARD POWER SUPPLY ARTWORK			
	4						
	5						
2	6	B	251307-01	DIODE-RECTIFIER FULL WAVE BRIDGE	D1,D2		TOSHIBA 6B4B41-LC1 100V 6A
	7						
	8						
1	9	B	251308-01	VOLTAGE REGULATOR, TO-3P	IC1		SANKEN SI-3052V
1	10	B	251308-02	VOLTAGE REGULATOR, TO-3P	IC2		SANKEN SI-3122V
	11						
	12						
1	13	B	251309-04	CAPACITOR ELEC. 15,000MF/16V	C1		RADIAL FLAT TYPE
1	14	B	251309-09	10,000MF/25V	C2		RADIAL FLAT TYPE
1	15	B	900301-06	470MF/10V	C3		
1	16	B	900100-18	CAPACITOR ELEC. 220MF/16V	C4		
	17						
	18						
1	19	B	903316-04	HEADER ASSY, POST, STRAIGHT 3.96 PITCH 4PIN	P6		MOLEX 5271-04A
	20						
	21						
	22						
	23						
	24						
	25						
2	26	B	251306-01	HEAT SINK, DIODE BRIDGE	HS1,HS2		FOR D1,D2
1	27	C	251305-01	HEAT SINK, VOLTAGE REGULATOR TO-3P	HS3		FOR IC1,IC2
	28						
	29						
1	30	B	250654-01	HARNESS ASSY, 2PIN			+12V
1	31	B	250653-01	HARNESS ASSY, 4PIN			+5V
	32						
	33						
	34						
	35						
	36						
	37						

commodore

TITLE: PCB ASSY, SINGLE FLOPPY POWER SUPPLY

DRWN BY: Y. Shibamoto DATE 6/16/83
CHKD: T. Tsuda 6/17/83
ENGR: T. Hoda DATE 6-17-83
APPR: T. Hoda 9/15/83

SIZE B | 250417 | REV A | SHT 2/4

ADVANCED REPRO

QUANTITY REQD PER PART / DASH NO.	ITEM	OS	PART NUMBER	DESCRIPTION	REF DES	BEND	NOTES
01							
	38						
REF	39	B	251402-01	SCHEMATIC DIAGRAM			POWER SUPPLY
	40						
	41						
	42						
	43						
	44						
2	45	B	251403-03	SCREW M3 SEMS PHILLIPS PAN HEAD			VOLTAGE REGULATOR (2) LG 10
	46						
2	47	B	251403-05	SCREW M3 SEMS PHILLIPS PAN HEAD			DIODE (2) LG 14
	48						
2	49	B	251403-01	SCREW M3 SEMS PHILLIPS PAN HEAD			HEAT SINK (2) LG 6
	50						
	51						
2	52	B	325551-04	INSULATION SILICON TO-3P			ATTACHED WITH VOLTAGE REGULATOR
	53						
	54						
A/R	55	B	904907-02	HEAT SINK COMPOUND THERM, CONDUCTIVE			CONJUNCTION WITH ITEM 6 AND ITEM 9, 10
	56						
	57						
1	58	B	251404-01	JUMPER WIRE JUN FRON WIRE			JUNKHOSHA AF04A080SA 0.6DIA
1	59	B	251405-01	JUMPER WIRE TIN COATED WIRE			AIKOKU DENSEN TCW 0.8DIA
	60						
	61						
	62						
	63						
	64						
	65						
	66						
	67						
	68						
	69						
	70						
	71						
	72						
	73						
	74						

commodore	TITLE: PCB ASSY, SINGLE FLOPPY POWER SUPPLY	DRWN BY: Y.S.Ribanuto DATE 6/16/83 CHKD: [illegible] 6/17/83	ENGR: [illegible] DATE 6-17-83 APPR: [illegible] 9/15/83	SIZE B	250417	REV A	SHT 3/4

ADVANCED REPRO

REVISIONS				
LTR	ZONE	DESCRIPTION	DATE	APPROVED
		SEE SHEET 1		

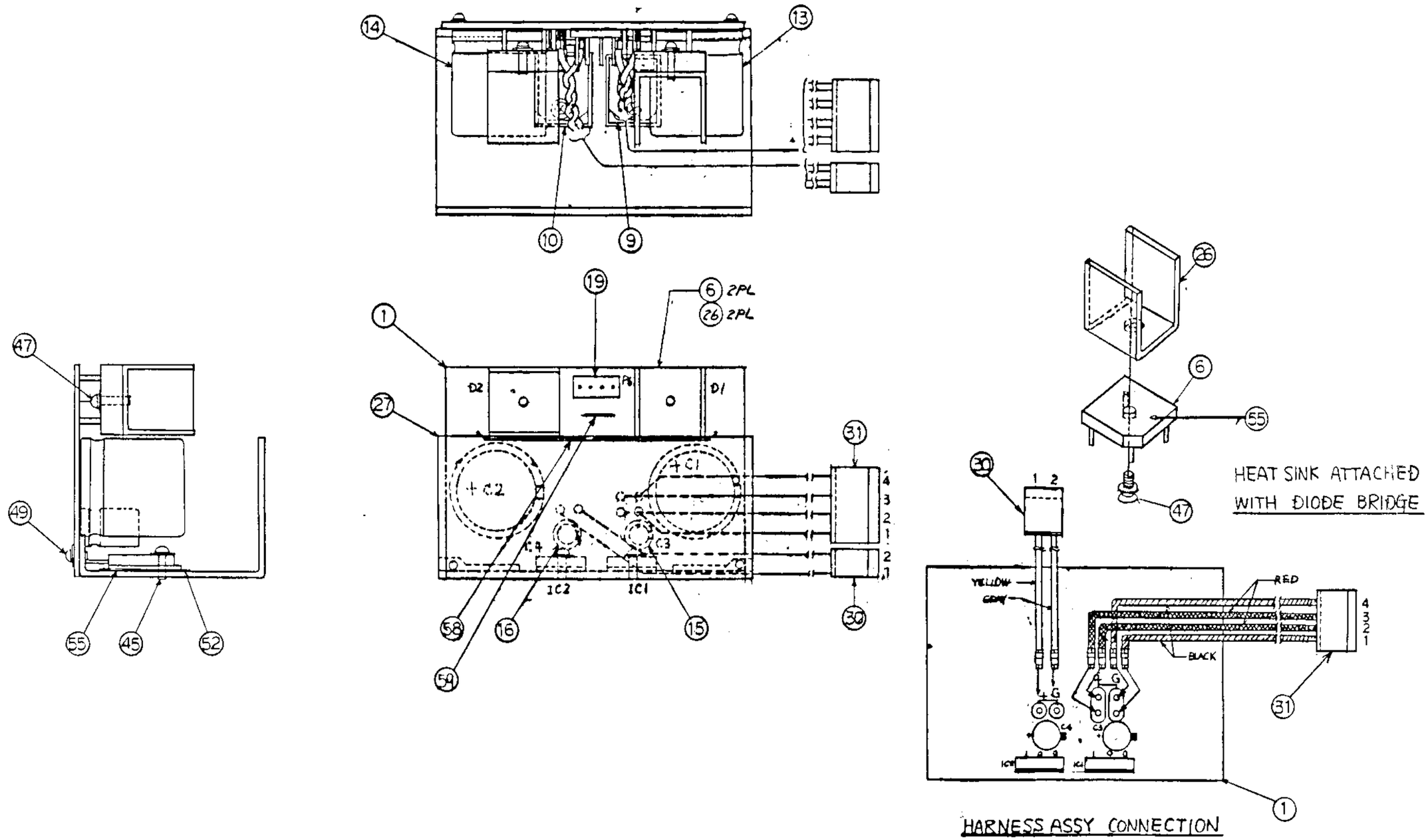

UNLESS OTHERWISE SPECIFIED TOLERANCES ON DECIMALS	DRAWN BY: Y. Shibamoto	DATE 6/16/83	commodore
	CHKD: Z. Takeuchi	6/19/83	PCB ASSY SINGLE FLOPPY POWER SUPPLY
	ENGR: Y. Shibamoto	6/17/83	
	APPR: Y. Matsumoto	7/18/83	
MATERIAL:	USED ON: SFD-1001	NEXT ASSY: 250651	SIZE C — 250417 — REV A
FINISH:			SCALE NONE — SHEET 4 OF 4

THIRD ANGLE SYSTEM DIMENTION: mm

PART NO.	DESCRIPTION	
250649-01	MAIN ASSY, SINGLE FLOPPY SFD-1001	UL
-02		CSA
-03		JIS
-04		VDE
250649-05	MAIN ASSY, SINGLE FLOPPY SFD-1001	BSI

(Fold Here)

DWG NO 250649

TITLE MAIN ASSY, SINGLE FLOPPY SFD-1001

REVISIONS

LTR	ZONE	DESCRIPTION	DATE	APPROVED
A		PRODUCTION RELEASE	9-13-83	[illegible]

2. NOT USE ITEM 27 AND 28 UNTILL RECOGNIZE CSA & UL.

1. SHEET 4 OF 4 SIZE D.

ASSY DWG

NOTES-UNLESS OTHERWISE SPECIFIED:

commodore	DRAWN BY [illegible]	DATE 6/16/83	ENGR [illegible]	6/17/83	SIZE B	SHEET 1 OF 4
	CHKD T. Tabuda	6/17/83	APPR [illegible]	9/17/83		

QUANTITY REQD PER PART / DASH NO. -05	-04	-03	-02	-01	ITEM	DS	PART NUMBER	DESCRIPTION	REF DES	BEND	NOTES
					1						
					2						
					3						
				1	4	B/C	250650 -01	BASE ASSY, SINGLE FLOPPY SFD-1001 UL			
			1		5	B/C	-02	CSA			
		1			6	B/C	-03	JIS			
	1				7	B/C	-04	VDE			
1					8	B/C	250650 -05	BASE ASSY, SINGLE FLOPPY SFD-1001 BSI			
					9						
					10						
					11						
					12						
					13						
					14						
					15						
					16						
					17						
1	1	1	1	1	18	B	251303 -01	PLATE MODEL, SFD-1001			
					19						
					20						
					21						
					22						
4	4	4	4	4	23	B	950150 -02	FOOT SELF ADHESIVE			SJ5012
					24						
					25						
					26						
			1		27	B	255014-01	LABEL, RATING SFD-1001			CSA , 2
				1	28	B	255014-02	LABEL, RATING SFD-1001			UL , 2
		1			29	B	255014-03	LABEL, RATING SFD-1001			JIS
	1				30	B	255014-04	LABEL, RATING SFD-1001			VDE
1					31	B	255014-05	LABEL, RATING SFD-1001			BSI
			S	S	32	B	255014-06	LABEL, RATING SFD-1001			SUBSTITUTE FOR ITEM 27 & 28. 2
					33						
					34						
					35						
					36						
					37						

commodore	TITLE: MAIN ASSY, SINGLE FLOPPY SFD-1001	DRWN BY: Y. Utsunomiya	DATE 6/16/83	ENGR:	DATE	SIZE B	250649	REV A	SHT 2/4
		CHKD: T. Tabuba	6/17/83	APPR: T. MURAMATSU	9/13/83				

ADVANCED REPRO

QUANTITY REQD PER PART / DASH NO. -05	-04	-03	-02	-01	ITEM	DS	PART NUMBER	DESCRIPTION	REF DES	BEND	NOTES
		1		1	38	B	255011-01	LABEL WARNING, FUSE REPLACEMENT			ENGLISH 250V 0.8A
1	1				39	B	255011-02	LABEL WARNING, FUSE REPLACEMENT			ENGLISH 250V 0.4A
			1		40	B	255011-03	LABEL WARNING, FUSE REPLACEMENT			ENGLISH, FRENCH 250V 0.8A
					41						
			1		42	B	255012-01	LABEL CAUTION, CSA			ENGLISH, FRENCH
					43						
				1	44	B	251086-01	LABEL, FCC CLASS A			
					45						
					46						
					47						
4	4	4	4	4	48	B	906800-02	SCREW METRIC, M3			PAN HEAD, PHILLIPS LG 10
					49						
					50						
					51						
1	1	1	1	1	52	B	251186-01	TOP CASE ASSY 2031LP/SFD-1001			
					53						
					54						
					55						
					56						
					57						
					58						
					59						
					60						
					61						
					62						
					63						
					64						
					65						
					66						
					67						
					68						
					69						
					70						
					71						
					72						
					73						
					74						

commodore	TITLE: MAIN ASSY, SINGLE FLOPPY SFD-1001	DRWN BY: Y. Utsunomiya	DATE 6/16/83	ENGR:	DATE	SIZE B	250649	REV A	SHT 3/4
		CHKD: T. Tatsuda	6/17/83	APPR: T. Mitsuhara	9/13/83				

ADVANCED REPRO

REVISIONS				
LTR	ZONE	DESCRIPTION	DATE	APPROVED
		SEE SHEET 1		

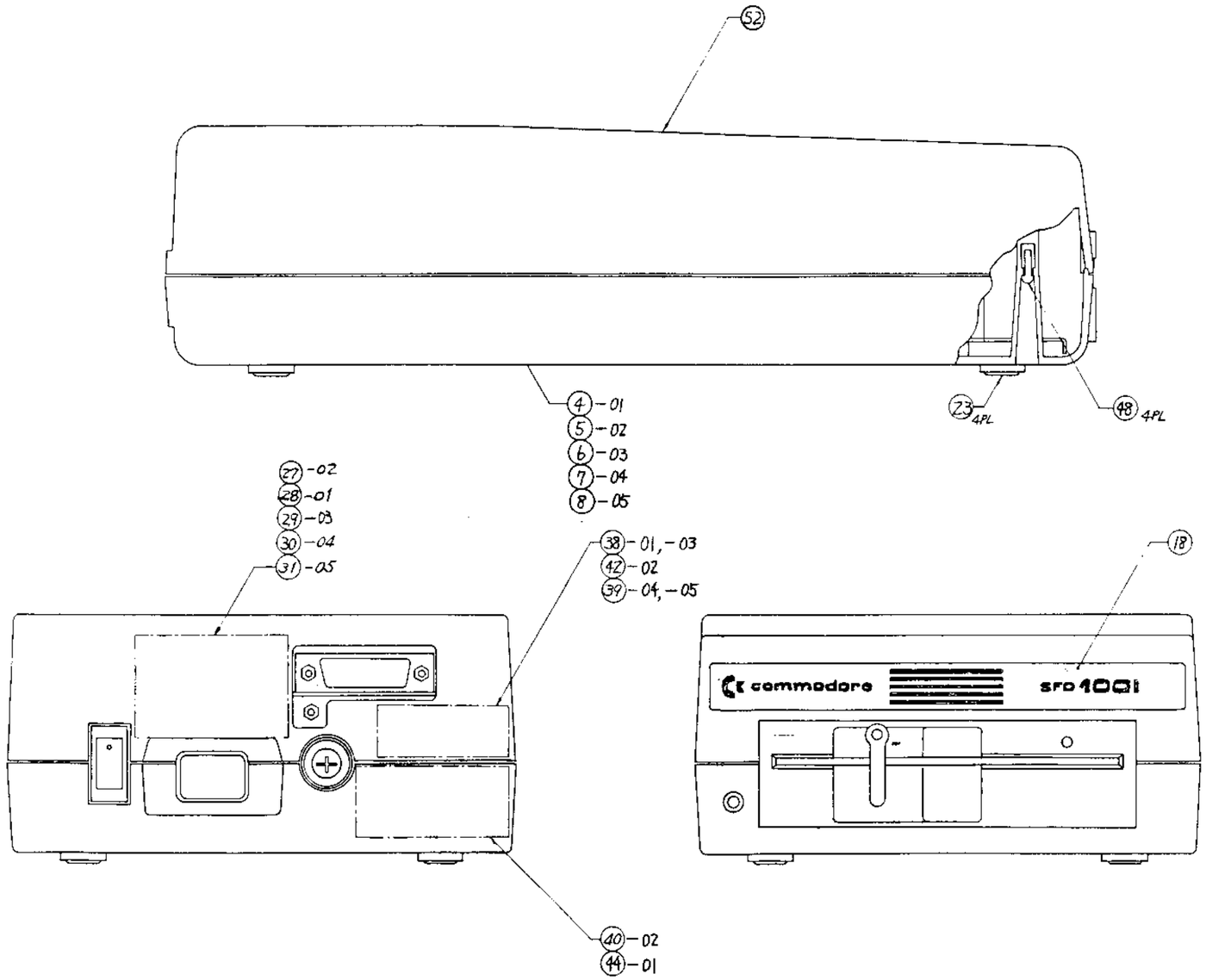

UNLESS OTHERWISE SPECIFIED TOLERANCES ON DECIMALS .X .XX .XXX ∠°	DRAWN BY	DATE	commodore
	CHKD		MAIN ASSY, SINGLE FLOPPY SFD-1001
	ENGR		
	APPR		
MATERIAL	USED ON SFD-1001	NEXT ASSY 250208	SIZE D 250649 REV A
FINISH			SCALE 1/1 SHEET 4 OF 4

PART NO.	DESCRIPTION	
250650 -01	BASE ASSY, SINGLE FLOPPY SFD-1001	UL
250650 -02		CSA
250650 -03		JIS
250650 -04		VDE
250650 -05	BASE ASSY, SINGLE FLOPPY SFD-1001	BSI

(Fold Here)

DWG NO 250650

TITLE BASE ASSY, SINGLE FLOPPY SFD-1001

REVISIONS

LTR	ZONE	DESCRIPTION	DATE	APPROVED
A		PRODUCTION RELEASE	9-13-83	[signature]

1. SHEET 3 OF 3 SIZE D

ASSY DWG

NOTES-UNLESS OTHERWISE SPECIFIED:

commodore	DRAWN BY [signature]	DATE 6/16/83	ENGR [signature]	6-17-83	SIZE B	SHEET 1 OF 3
	CHKD T. Tokuda	6/17/83	APPR [signature]	9/13/83		

QUANTITY REQD PER PART / DASH NO. 05	04	03	02	01	ITEM	DS	PART NUMBER	DESCRIPTION	REF DES	BEND	NOTES
					1						
					2						
					3						
				1	4	B/C/D	250651-01	POWER SUPPLY ASSY, SINGLE FLOPPY SFD-1001 UL			
			1		5	B/C/D	250651-02	CSA			
		1			6	B/C/D	250651-03	JIS			
	1				7	B/C/D	250651-04	VDE			
1					8	B/C/D	250651-05	POWER SUPPLY ASSY, SINGLE FLOPPY SFD-1001 BSI			
					9						
					10						
					11						
					12						
1	1	1	1	1	13	B	250652-01	LED ASSY, TRI-STATE			
					14						
					15						
					16						
					17						
1	1	1	1	1	18	B	251152-01	LAMP HOLDER SET			SANKEN SLH-50
					19						
					20						
1	1	1	1	1	21	B	251540-01	STAND-OFF			
					22						
1	1	1	1	1	23	D	1540015-02	CASE BOTTOM			
					24						
1	1	1	1	1	25	B	251541-03	SPRING WASHER M3			
					26						
					27						
6	6	6	6	6	28	B	906883-04	SCREW, SELF-TAPPING M3			PAN HEAD, PHILLIPS LG10
					29						
					30						
					31						
					32						
					33						
1	1	1	1	1	34	B	325541-02	SCREW, WITH EXT TOOTH METRIC, M3			PAN HEAD, PHILLIPS LG6
					35						
					36						
					37						

commodore

TITLE: BASE ASSY, SINGLE FLOPPY SFD-1001

DRWN BY: [signature] DATE 6/16/83
CHKD: [signature] 6/19/83
ENGR: DATE
APPR: [signature] 7/18/83

SIZE B | 250650 | REV A | SHT 2/3

ADVANCED REPRO

SEE SHEET 1

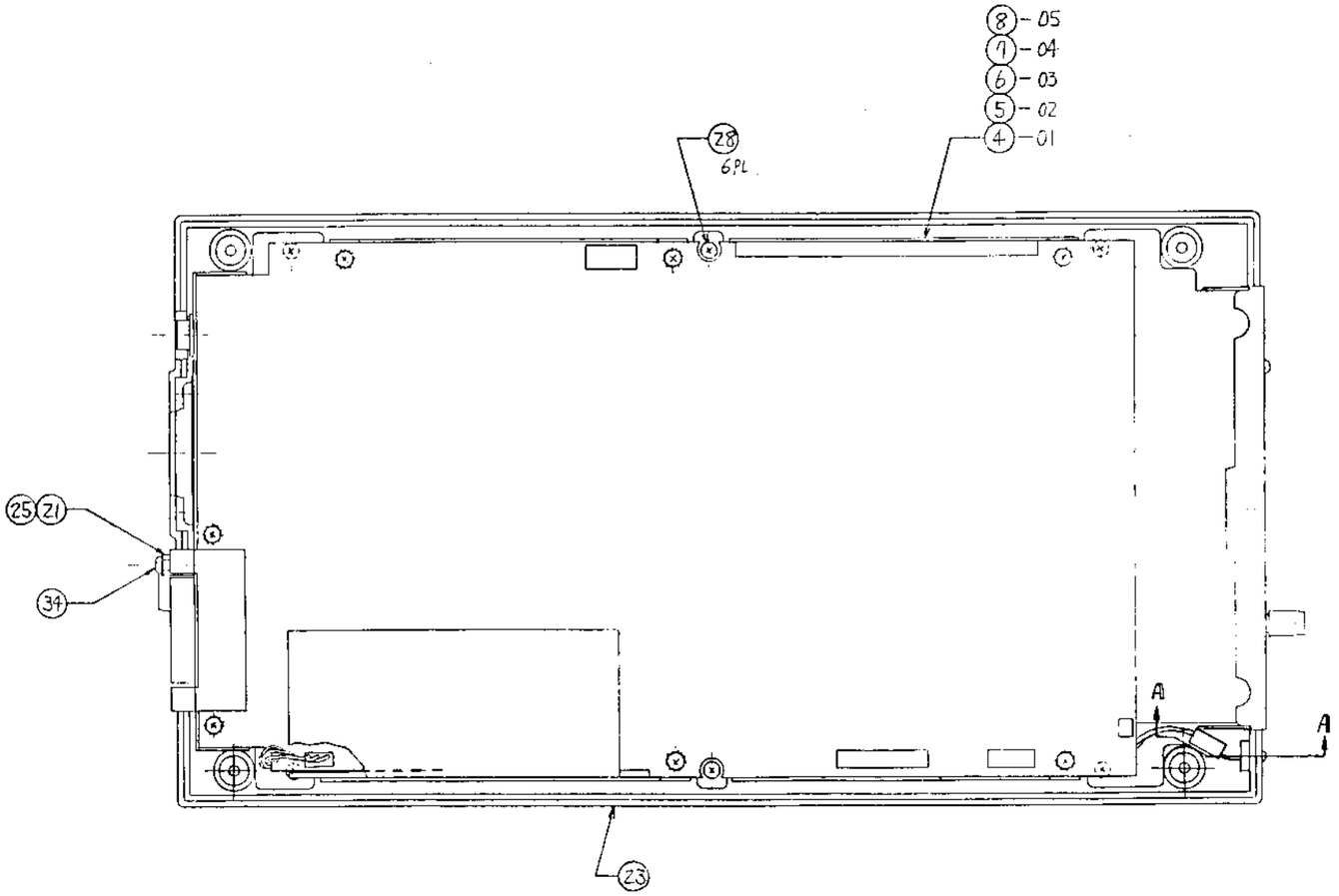

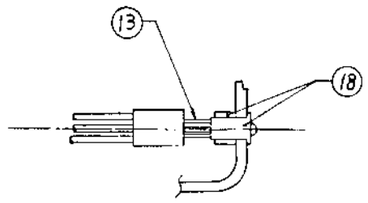

SECTION A-A

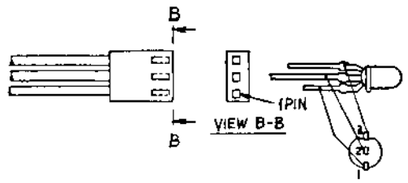

LED BOTTOM VIEW

			BASE ASST SINGLE FLOPPY SFD-1001
MATERIAL	SFD -1001	250649	SIZE D 250650 REV A
			SCALE NONE WEIGHT 3 - 5

PART NO.	DESCRIPTION	
250651-01	POWER SUPPLY ASSY, SINGLE FLOPPY SFD-1001	UL
-02		CSA
-03		JIS
-04		VDE
250651-05	POWER SUPPLY ASSY, SINGLE FLOPPY SFD-1001	BSI

DWG NO 250651

TITLE: POWER SUPPLY ASSY, SINGLE FLOPPY SFD-1001

REVISIONS

LTR	ZONE	DESCRIPTION	DATE	APPROVED
A		PRODUCTION RELEASE	9-19-83	
B		REVISED PER ECO 830452	10-31-83	

1. SHEET 4 OF 5 : SIZE D
ASSY DWG 5 OF 5 SIZE C

NOTES-UNLESS OTHERWISE SPECIFIED:

commodore	DRAWN BY Y. Utsunomiya	6-17-83	SIZE B	SHEET 1 OF 5
	CHKD T. Tokuda	9/10/83		

QUANTITY REQD PER PART / DASH NO. -05	-04	-03	-02	-01	ITEM	DS	PART NUMBER	DESCRIPTION	REF DES	BEND	NOTES
1	1	1	1	1	1	D	251310 -01	POWER CHASSIS, SFD-1001			
					2						
			1		3	B	251401 -01	METAL, NET			
					4						
1	1	1	1	1	5	B/C	250417 -01	PCB ASSY, SINGLE FLOPPY POWER SUPPLY			
					6						
					7						
					8						
1	1	1	1	1	9	B/C	250416 -03	PCB ASSY, SINGLE FLOPPY CONTROL			
					10						
					11						
1	1	1	1	1	12	B	251091-02	FLOPPY DISK DRIVE 100TPI DOUBLE SIDED			JU-570-2 MATSUSHITA COMMUNICATION CO. LTD.
					13						
					14						
					15						
					16						
		1	1	1	17	B	903614 -01	FUSE HOLDER	HF1		ECHO FH032
1	1				18	B	903615 -01	FUSE HOLDER	HF1		ECHO FH033
					19						
					20						
					21						
					22						
1	1	1	1	1	23	B	904509 -01	SWITCH, ROCKER	SW1		
					24						
					25						
					26						
1	1	1		1	27	B	325552 - 01	POWER FILTER CONNECTOR	FL1		TOKIN GL-2030E
			1		28	B	325552 - 02	POWER FILTER CONNECTOR	FL1		TOKIN GL-2030E-12
1	1	1	1	1	29	B	1540010-04	GROUND CABLE ASSY			L=170mm
					30						
					31						
					32						
					33						
					34						
					35						
					36						
					37						

commodore

TITLE: POWER SUPPLY ASSY, SINGLE FLOPPY SFD-1001

DRWN BY: [illegible] DATE 6/16/83
CHKD: [illegible] 6/19/83
ENGR: DATE
APPR: T. HATSUSHI 9/13/83
SIZE B 250651 REV B SHT 2/5

ADVANCED REPRO

QUANTITY REQD PER PART / DASH NO. 05	04	03	02	01	ITEM	DS	PART NUMBER	DESCRIPTION	REF DES	BEND	NOTES
		1	1	1	38	B	903555-19	FUSE 0.8A, 250V, SLO-BLO	F1		6.3 DIA X 30 NORMAL SIZE
1	1				39	B	903558-06	FUSE 0.4A, 250V, SLO-BLO	F1		5 DIA X 20 MINIATURE SIZE
					40						
					41						
					42						
		S	S	1	43	B	251201-01	TRANSFORMER	T1		UL 117/100V SUBSTITUTE FOR ITEM 44
		1	1		44	B	251201-02	TRANSFORMER	T1		CSA, JIS 117/100V
1	1				45	B	251201-03	TRANSFORMER	T1		VDE, BSI 240/220V
					46						
					47						
					48						
					49						
1	1	1	1	1	50	B	200017-03	LEAD WIRE AWG18 1015			L = 150mm BLACK
1	1	1	1	1	51	B	200017-04	LEAD WIRE AWG18 1015			L = 80 mm BLACK
					52						
					53						
					54						
					55						
					56						
7	7	7	7	7	57	B	905476-02	TUBING, SHRINCABLE			Φ5 L=20mm
1	1	1	1	1	58	B	905476-04	TUBING, SHRINCABLE			Φ4 L=40mm
					59						
					60						
					61						
9	9	9	15	9	62	B	325541-02	SCREW, WITH EXT TOOTH METRIC, M3			PCB (7), HEAT SINK (2), METAL, NET(6), PAN HEAD PHILLIPS LG6
1	1	1	1	1	63	B	325542-02	↑ , WITH EXT TOOTH METRIC, M4			GROUND (1), PAN HEAD PHILLIPS LG6
4	4	4	4	4	64	B	325548-04	↓ , METRIC, M5			TRANSFORMER (4), PAN HEAD PHILLIPS WITH SPRING WASHER LG10
4	4	4	4	4	65	B	325541-04	SCREW, WITH EXT TOOTH METRIC, M3			FLOPPY DISK (4), PAN HEAD PHILLIPS LG10
2	2	2	2	2	66	B	906803-03	FLAT HEAD SCREW M3			FILTER CONNECTOR (2), FLAT HEAD PHILLIPS LG10
2	2	2	2	2	67	B	251403-01	SCREW M3 SEMS PHILLIPS PAN HEAD			PCB PS (2), LG6
					68						
A/R	A/R	A/R	A/R	A/R	69	B	904907-02	HEATSINK COMPOUND THERM, CONDUCTIVE			
					70						
					71						
					72						
					73						
					74						

commodore

TITLE: POWER SUPPLY ASSY, SINGLE FLOPPY SFD-1001

DRWN BY: [signature] DATE 6/16/83
CHKD: T. Tokuda 6/17/83
ENGR:
APPR: T. [signature] DATE 9/13/83

SIZE B 250651 REV B SHT 3/5

ADVANCED REPRO

REVISIONS				
LTR	ZONE	DESCRIPTION	DATE	APPROVED
		SEE SHEET 1		

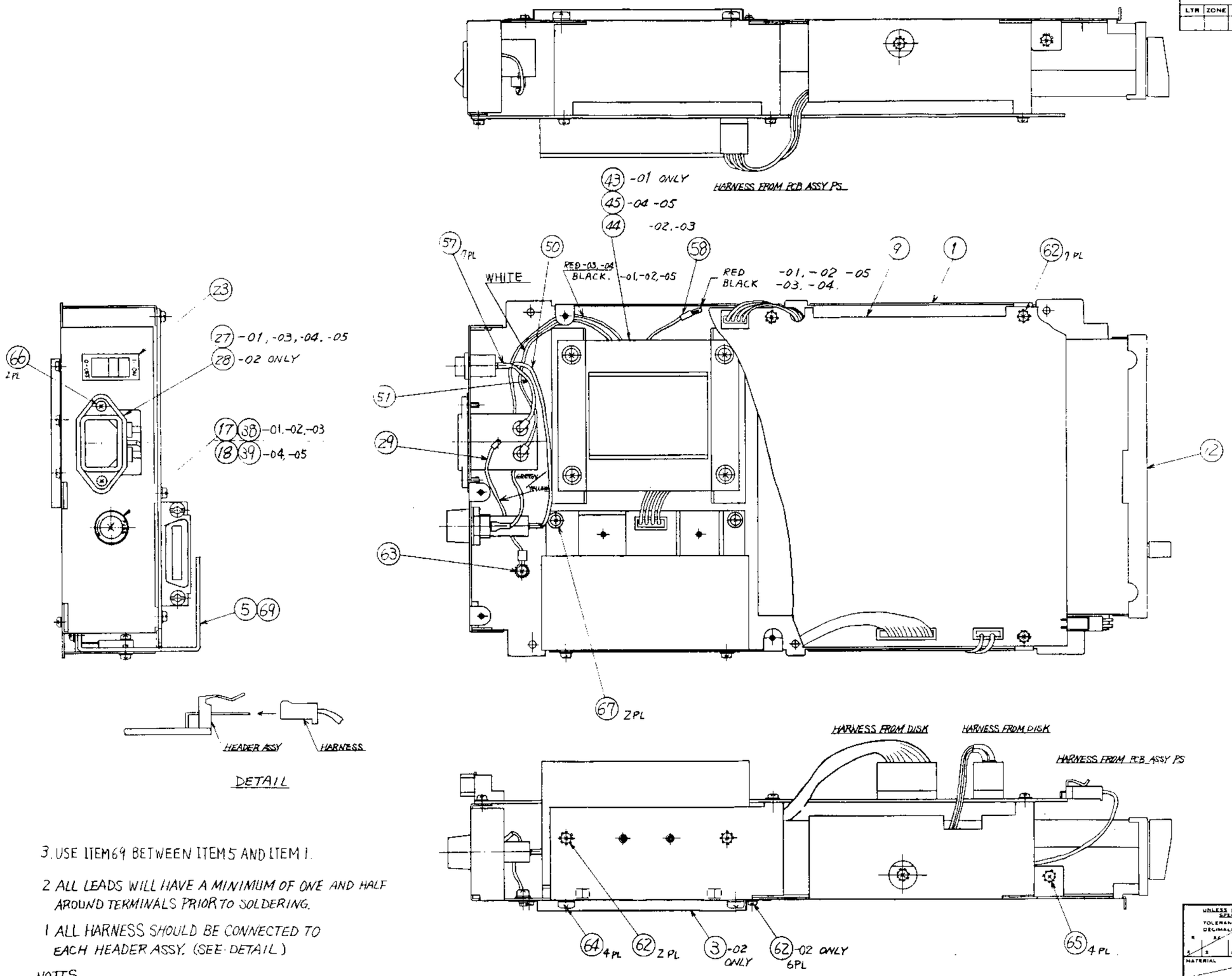

3. USE ITEM 69 BETWEEN ITEM 5 AND ITEM 1.

2 ALL LEADS WILL HAVE A MINIMUM OF ONE AND HALF AROUND TERMINALS PRIOR TO SOLDERING.

1 ALL HARNESS SHOULD BE CONNECTED TO EACH HEADER ASSY. (SEE DETAIL)

NOTES.

UNLESS OTHERWISE SPECIFIED TOLERANCES ON DECIMALS	DRAWN BY	DATE	commodore
	CHKD		POWER SUPPLY ASSY, SINGLE FLOPPY SFD-1001
	ENGR		
	APPR		
MATERIAL	USED ON SFD 1001	NEXT ASSY 250650	SIZE D 250651 REV B
FINISH			SCALE 1/1 SHEET 4 OF 5

REVISIONS				
LTR	ZONE	DESCRIPTION	DATE	APPROVED
		SEE SHEET 1		

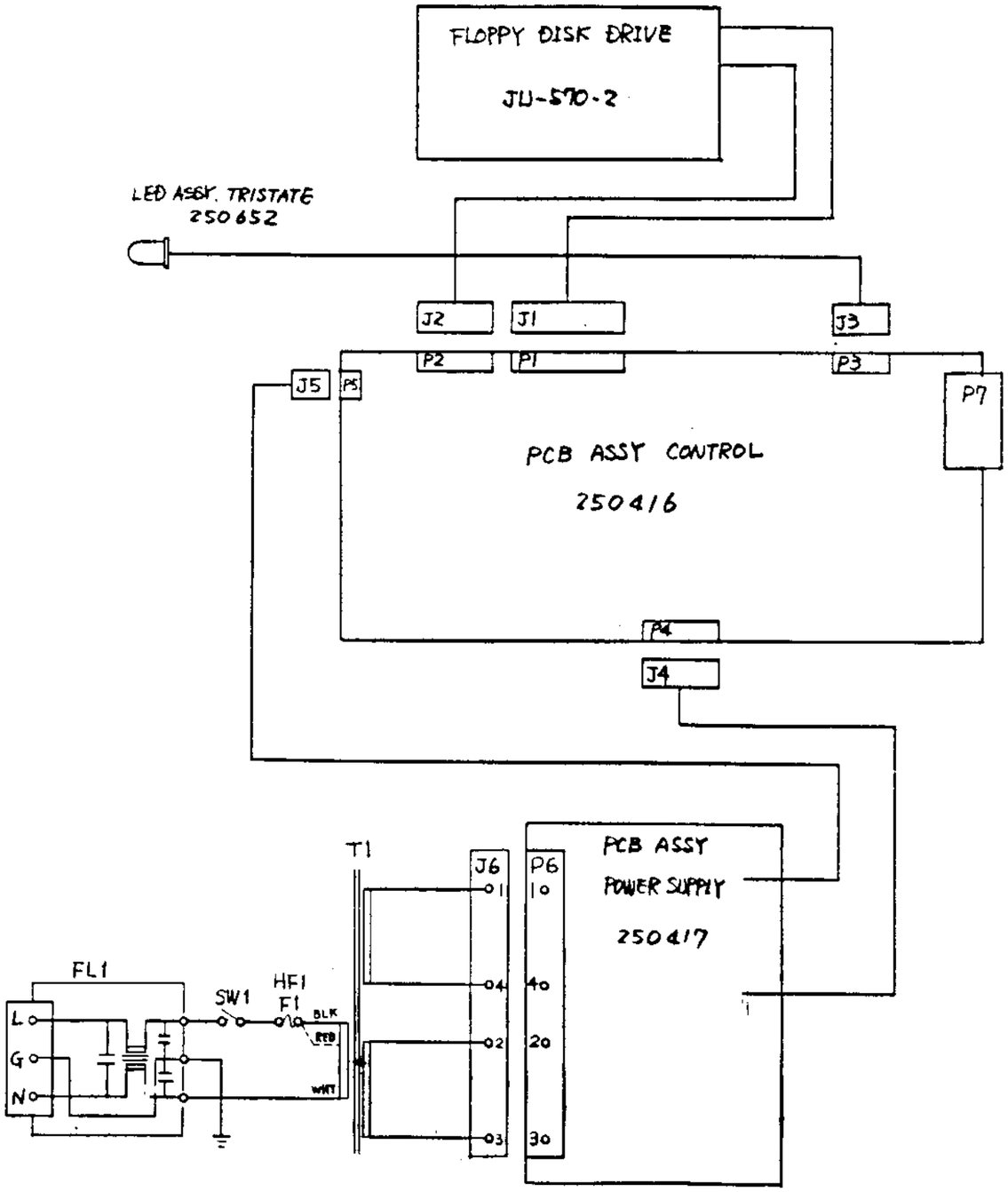

POWER SUPPLY ASSY DWG NO		TRANSFORMER	USE WIRE
250651-01	UL	251201-01	WHT. AND BLK.
250651-02	CSA	251201-02 OR 251201-07	WHT. AND BLK.
250651-03	JIS		WHT. AND RED.
250651-04	VDE	251201-03	WHT. AND RED
250651-05	BSI		WHT. AND BLK

UNLESS OTHERWISE SPECIFIED TOLERANCES ON: DECIMALS .X .XX .XXX ∠'S

MATERIAL

FINISH:

DRAWN BY:	DATE
Y. Shibamoto	6/16/83
CHKD T. Tokuda	6/17/83
ENGR [illegible]	6/17/83
APPR T. [illegible]	7/13/83

USED ON	NEXT ASSY
SFD-1001	250650

commodore

POWER SUPPLY ASSY
SINGLE FLOPPY SFD-1001
CONNECTION DIAGRAM

SIZE		REV
C	250651	B

SCALE NONE SHEET 5 OF 5

THIRD ANGLE SYSTEM DIMENTION

PART NO.	DESCRIPTION
250652-01	LED ASSY, TRI-STATE

[Fold Here]

DWG NO 250652

TITLE LED ASSY, TRI-STATE

REVISIONS

LTR	ZONE	DESCRIPTION	DATE	APPROV
A		PRODUCTION RELEASE	7-13-81	

1. SHEET 3 OF 3 SIZE B

ASSY DWG

NOTES-UNLESS OTHERWISE SPECIFIED:

commodore	DRAWN BY Y. Shibamato	DATE 6/16/83	ENGR	6/17/83	SIZE B	SHEET 1 OF 3
	CHKD		APPR	9/23/83		

QUANTITY REQD PER PART / DASH NO. 01	ITEM	DS	PART NUMBER	DESCRIPTION	REF DES	BEND	NOTES
1	1	B	251119-01	LED, TRI-STATE	CR1		SHARP GL-5NP5 RED/GREEN
S	2	B	251119-02	LED, TRI-STATE	CR1		SUBSTITUTE FOR ITEM 1
	3						
	4						
	5						
	6						
	7						
	8						
1	9	B	908000-01	CONNECTOR, HOUSING	J3		MOLEX 5207-03 2.5 PITCH 3PIN
3	10	B	903353-01	CONNECTOR, PIN			MOLEX 5103T
1	11	B	251542-03	CONNECTOR, HOUSING			MOLEX 3021-03 2.5PITCH 3PIN
3	12	B	251543-01	CONNECTOR, PIN			MOLEX 2759
1	13	B	200019-06	LEAD WIRE AWG 24 1007			YEL. L= 420 mm
1	14	B	200019-07	LEAD WIRE AWG 24 1007			GRAY L= 420 mm
1	15	B	200019-08	LEAD WIRE AWG 24 1007			ORG. L= 420 mm
	16						
	17						
	18						
	19						
2	20	B	251156-12	CABLE, TIE			
	21						
	22						
	23						
	24						
	25						
	26						
	27						
	28						
	29						
	30						
	31						
	32						
	33						
	34						
	35						
	36						
	37						

commodore	TITLE: LED ASSY, TRI-STATE	DRWN BY: Y. Shibamoto	DATE 6/16/83	ENGR:	DATE	SIZE B	250652	REV A	SHT 2/3
		CHKD: [illegible]	6/16/83	APPR: [illegible]	8/12/83				

ADVANCED REPRO

PART NO.	NOTE
251252-01	6530 ADAPTOR FOR SFD-1001
251252-02	6530 ADAPTOR FOR 8250LP

REVISIONS					
LTR	ZONE		DESCRIPTION	DATE	APPROVED
A			PRODUCTION RELEASE	9-13-83	

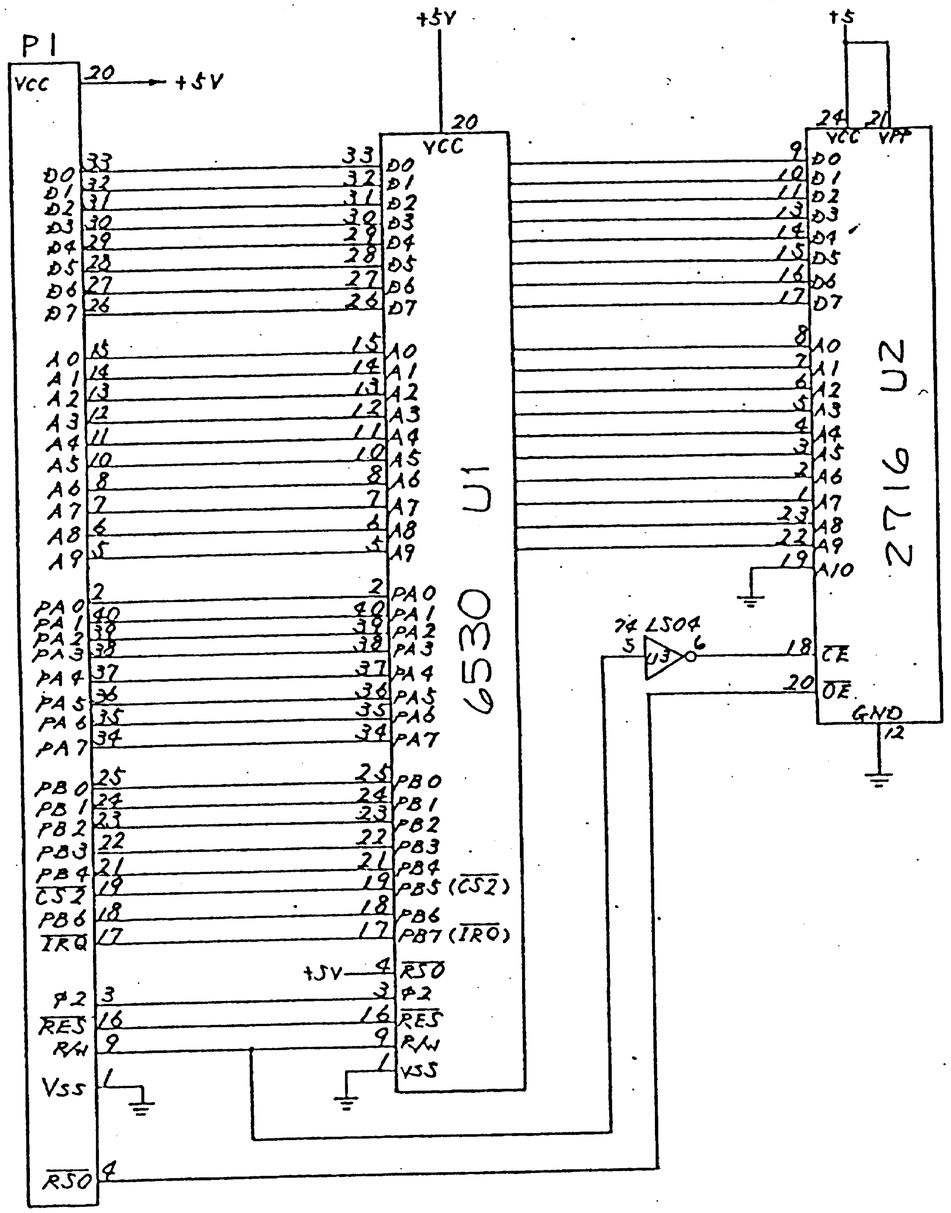

-01 SHOWN

UNLESS OTHERWISE SPECIFIED TOLERANCES ON: DECIMALS .X ±, .XX ±, .XXX ±, ∠'S ±	DRAWN BY: K. Maruyama	DATE 1/20/83
	CHKD: T. Takeda	4/30/83
	ENGR: T. Okada	6/7/83
	APPR: T. MATSUMOTO	7/13/83
MATERIAL:	USED ON SFD-1001	NEXT ASSY 250414
FINISH:		

commodore

SCHEMATIC DIAGRAM
6530 ADAPTOR

SIZE		REV
B	251252	A
SCALE NONE	SHEET 1 OF 2	

REVISIONS				
LTR	ZONE	DESCRIPTION	DATE	APPROVED
A		PRODUCTION RELEASE	4-13-83	

6MHz
F80
PO~P7
(3A1)

P7
P7-1
-2
-3
-4
-11
-9
-13
-14
-15
-16
F.G.
-12
-6
-5
-7
-8
-18~24

+5V
FB3
FB14
FB13
FB15
FB12
FB9
FB11
FB10
FB8
FB5
FB4
FB6
FB7

DI01
DI02
DI03
DI04
DI05
DI06
DI07
DI08

8J 3446
9J 3446
10J 3446
6J 6532
3J 2364
4J 6532
5H LS157
9G M58725P
7G M58725P
2H 6502
11J LM555
3G LS42

C41 C40 C42 C39 47PF/50V
C36 C38 C37 C35 47PF/50V
C32 C31 C33 C34 47PF/50V
C58 0.1μ/50V
C59 0.1μ/50V
C60 0.1μ/50V
C61 0.1μ/50V
C62 0.1μ 50V
C63 0.1μ/50V
C64 0.033μ/50V
C65 0.022μ
C66 1μ/16T
C67 0.1μ/50V
C56 0.1μ 50V
C57 0.1μ 50V
C50 0.1μ/50V
C45 0.01μ/50V
C48 10μ/16T
C49 10μ/16T
C43 47PF/50V
R47 2.4K
R69 2.4K
R70 5.1K
R71 5.1K
R49 150
R65 330
R64 330
R63 5.1K
R62 2K
R61 2K
R67 10K
R66 100K
FR1 2.2μH
L6
11G 12MHz
519 520
7414
7406
7419
LS08
LS00
LS02
LS04
LS42
LS157
LS74
LS175
LS244
LS367
LS368
LS32
LS10

ATN
IAC
WG
IBD
BI#2
IRW
RFDD
DACD
IFC
ATNA
DACD
FES
FRW · FA0~FA12
(3A1)
ACT LED o
(4A1)
"ERROR"
"POWER"
COMMON
PSO
CS2
(3D1)

UNLESS OTHERWISE SPECIFIED	DRAWN BY:	DATE
TOLERANCES ON: DECIMALS x .xx .xxx ∠'s	CHKD:	
	ENGR:	
	APPR:	
MATERIAL:	USED ON: SFD 1001	NEXT ASSY: 250416
FINISH:		

commodore

SCHEMATIC DIAGRAM
SINGLE FLOPPY CONTROL

SIZE D | 251406 | REV A

SCALE NONE | SHEET 1 OF 9

4 9

REVISIONS				
LTR	ZONE	DESCRIPTION	DATE	APPROVED
		SEE SHEET 1		

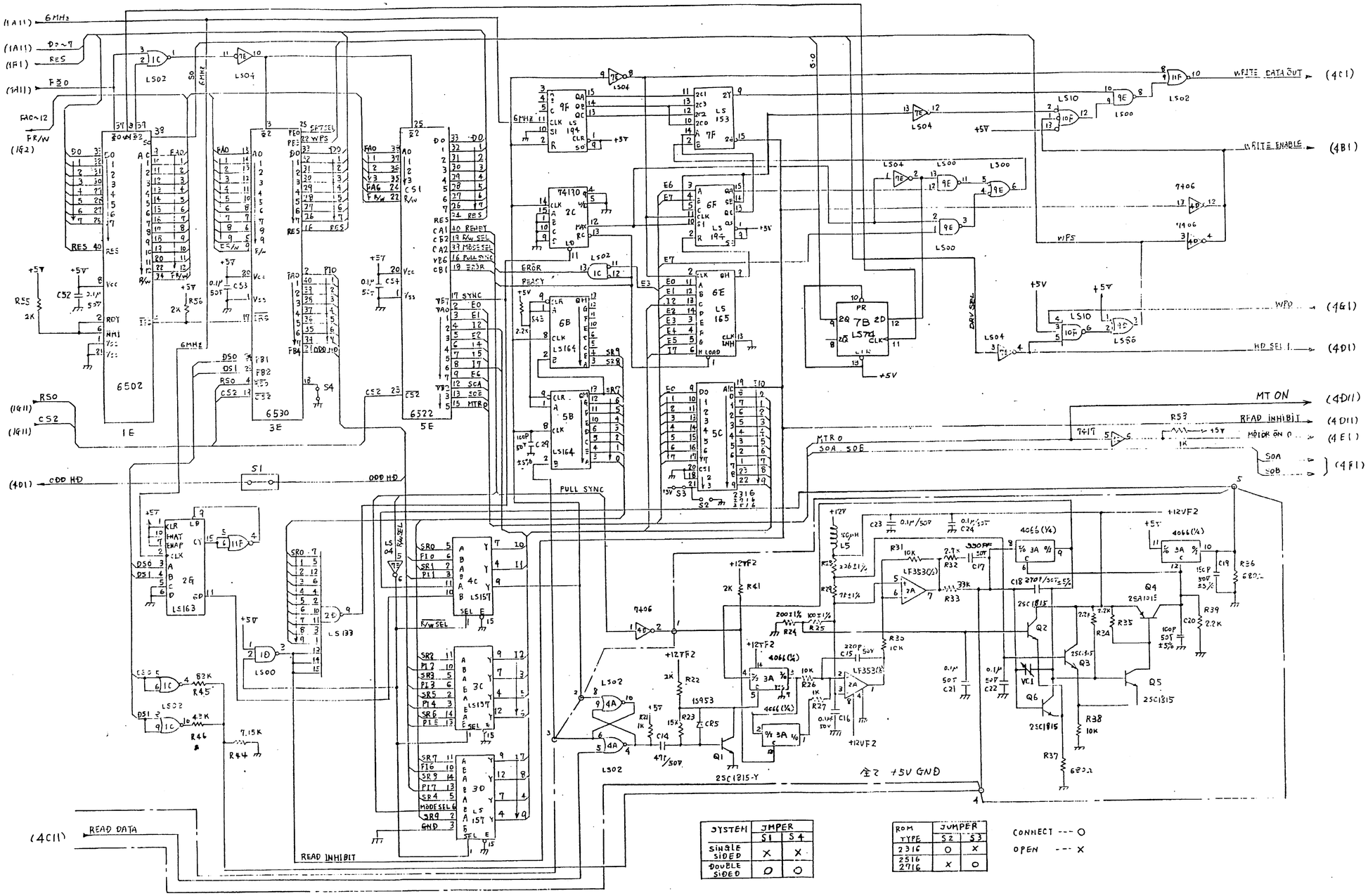

SYSTEM	JUMPER	
	S1	S4
SINGLE SIDED	X	X
DOUBLE SIDED	O	O

ROM TYPE	JUMPER	
	S2	S3
2316	O	X
2516 2716	X	O

CONNECT --- O
OPEN --- X

NOTES - UNLESS OTHERWISE SPECIFIED:

UNLESS OTHERWISE SPECIFIED TOLERANCES ON DECIMALS .X ±.1 .XX ±.02 .XXX ±.005 ∠ ±.5

DRAWN BY:	Y. Shiramoto	6/19/82
CHKD:	T. Akyuz	6/20/83
ENGR:	A. Adams	6/21/83
APPR:	T. Akyuz	6/23/83

MATERIAL: FINISH: USED ON: NEXT ASSY:

commodore

SCHEMATIC DIAGRAM
SINGLE FLOPPY CONTROL

SIZE D | 251406 | REV A

SCALE NONE | SHEET 2 OF 3

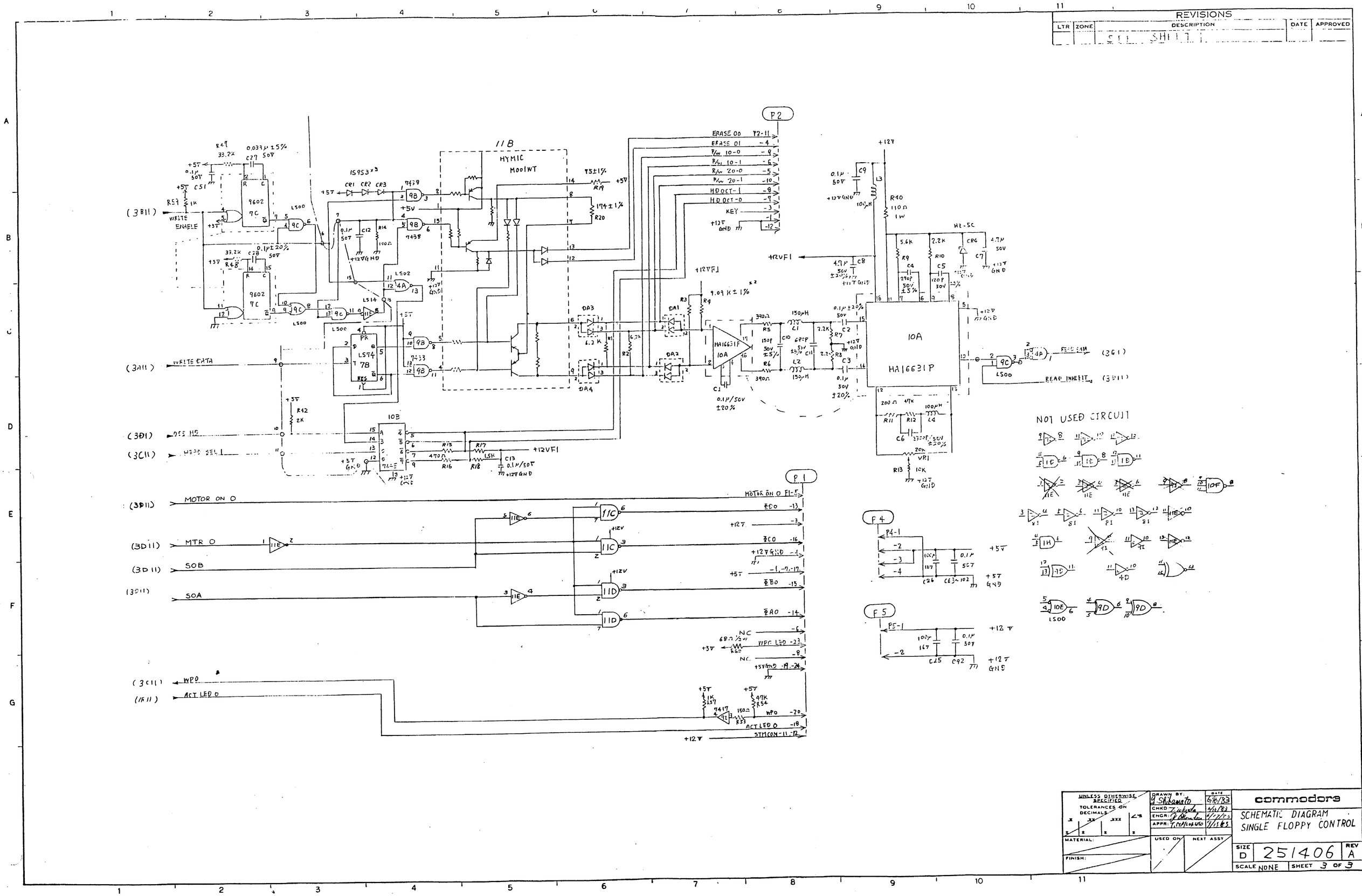
REVISIONS
LTR
ZONE
DESCRIPTION
DATE
APPROVED
11B
HYMIC
MOOIWT
P2
ERASE 00
ERASE 01
R/W 10-0
R/W 10-1
R/W 20-0
R/W 20-1
HD OCT-1
HD OCT-0
KEY
WRITE ENABLE
WRITE DATA
HA16631P
10A
10B
LS74
7B
9602
7C
LS00
LS02
LS14
LS00
READ DATA
READ INHIBIT
NOT USED CIRCUIT
P1
MOTOR ON O
MTR O
SOB
SOA
WPO
ACT LED O
STMCON
P4
P5
UNLESS OTHERWISE SPECIFIED
TOLERANCES ON DECIMALS
MATERIAL:
FINISH:
DRAWN BY:
CHKD
ENGR:
APPR:
DATE
USED ON
NEXT ASSY
commodore
SCHEMATIC DIAGRAM
SINGLE FLOPPY CONTROL
SIZE
D
251406
REV
A
SCALE NONE
SHEET 3 OF 3