SERVICE MANUAL

MODEL C64 COMPUTER

SEPTEMBER 1985 PN-314001-02

Commodore Business Machines, Inc.
1200 Wilson Drive, West Chester, Pennsylvania 19380 U.S.A.

Commodore makes no expressed or implied warranties with regard to the information contained herein. The information is made available solely on an as is basis, and the entire risk as to quality and accuracy is with the user. Commodore shall not be liable for any consequential or incidental damages in connection with the use of the information contained herein. The listing of any available replacement part herein does not constitute in any case a recommendation, warranty or guaranty as to quality or suitability of such replacement part. Reproduction or use without expressed permission, of editorial or pictorial content, in any matter is prohibited.

This manual contains copyrighted and proprietary information. No part of this publication may be reproduced, stored in a retrieval system, or transmitted in any form or by any means, electronic, mechanical, photocopying, recording or otherwise, without the prior written permission of Commodore Electronics Limited.

Copyright © 1985 by Commodore Electronics Limited.
All rights reserved.

CONTENTS

Title	Page
SPECIFICATIONS	1
PRODUCT PARTS LIST	2
BLOCK DIAGRAM	3
CIRCUIT THEORY	
POWER SUPPLY	4
RESET LOGIC	5
CLOCK CIRCUITS	6
I/O, ROM, EXPANSION PORT	7
RAM CONTROL LOGIC	8
5 PIN VIDEO AND AUDIO OUTPUTS	9
8 PIN VIDEO AND AUDIO OUTPUTS	10
CASSETTE INTERFACE	11
KEYBOARD, JOYSTICK & PADDLE INTERFACES	12
SERIAL INTERFACE, USER PORT	13
TROUBLESHOOTING GUIDE	14
BOARD IDENTIFICATION	17
PCB ASSEMBLY #326298-01	
BOARD LAYOUT	18
PARTS LISTS	19,20
PIN ASSIGNMENTS	21
SCHEMATIC #326106	21,22
PCB ASSEMBLY #250407-04	
BOARD LAYOUT	23
PARTS LIST	24,25
MODULATOR SCHEMATIC #251025	26
SCHEMATIC #251138	26,27
PIN ASSIGNMENTS	27
PCB ASSEMBLY #250425-01	
BOARD LAYOUT	28
PARTS LIST	29,30
MODULATOR SCHEMATIC #251696	31
SCHEMATIC #251469	31,32
PIN ASSIGNMENTS	32

C64 · COMPUTER

GENERAL DESCRIPTION	• The "All Purpose" Commodore 64 is the complete computer for education, home or small business applications. Supported by quality peripherals and a full range of software, the Commodore 64 is perfect for the family. No other computer can offer such variety of uses and applications at such an affordable price.
MEMORY	• 64K RAM
ROM	• 20K ROM Standard (includes operating system and BASIC interpreter)
MICROPROCESSOR	• 6510A Microprocessor—1.02 MHz clock • Compatible with the 6502
DISPLAY	• 40 Columns X 25 lines of text
COLORS	• 16 Background, border and character colors
CHARACTERS	• Upper & lower case letters, numerals and symbols • Reverse characters • All PET graphic characters
DISPLAY MODES	• Text characters • High resolution graphics
RESOLUTION	• 320 X 200 Pixels
SPRITES	• 8 independent sprites • Each consists of 24 X 21 pixels and up to 4 colors • Each independently expandable horizontally and vertically • Collision detection for sprite to sprite and data to sprite collisions
SOUND	• 6581 Sound Interface Device includes 3 independent tone generators—each with 9 octaves • Each voice includes programmable ADSR generator (Attack, Decay, Sustain, Release) and control of sawtooth, triangle, square, variable pulse and noise waveforms • Full filtering capabilities with low, high and band pass filters • External sound input
KEYBOARD	• Full size typewriter style design
KEYS	• 66 Keys total • 2 Cursor control keys • 4 Function keys (up to 8 user defined/programmable functions possible) • Upper and lower case character set • Graphic character set
INPUTS/OUTPUTS	• User port • Serial port • ROM cartridge port • 2 Joystick/paddle ports • Video port • C1530 Cassette drive interface port
FEATURES	• Built-in BASIC 2.0—over 70 commands, statements and functions • Full screen editor
PERIPHERALS	• C1541 Disk drive • C1530 Datasette • MPS 801 Dot matrix printer • MPS 802 Dot matrix printer • MPS 803 Dot matrix printer • DPS 1101 Daisey wheel printer • C1520 Plotter/Printer • C1702 Color monitor • CM141 Color monitor
POWER REQUIREMENTS	• 120 Volts, 60 Hz

Specifications subject to change without notice.

PARTS LIST
C-64

PLEASE NOTE: Commodore part numbers are provided for reference only and do not indicate the availability of parts from Commodore. Industry standard parts (Resistors, Capacitors, Connectors) should be secured locally. Approved cross-references for TTL chips, Transistors, etc. will be available in manual form through the Service Department in November of 1984. Unique or non-standard parts will be stocked by Commodore and are indicated on the parts list by a "C".

TOP CASE ASSY

Top Case	C 326113-01
Keyboard	C 326166-02
LED Plate	C 326160-01
Nameplate	C 326161-01
Lamp Holder Set	C 903820-03
LED Assembly	C 1001039-01

BOTTOM CASE ASSY

Bottom Case	C 326114-01
Foot, Self-Adhesive	C 950157-04
PCB Shield Plate	C 326131-01
PCB Insulation Sheet	C 326288-01

ACCESSORIES

Users Manual	C 320974
Power Supply	C 251053-02
RF Cable	C 326189-01
Switch Box	C 904778-01

C-64 BLOCK DIAGRAM

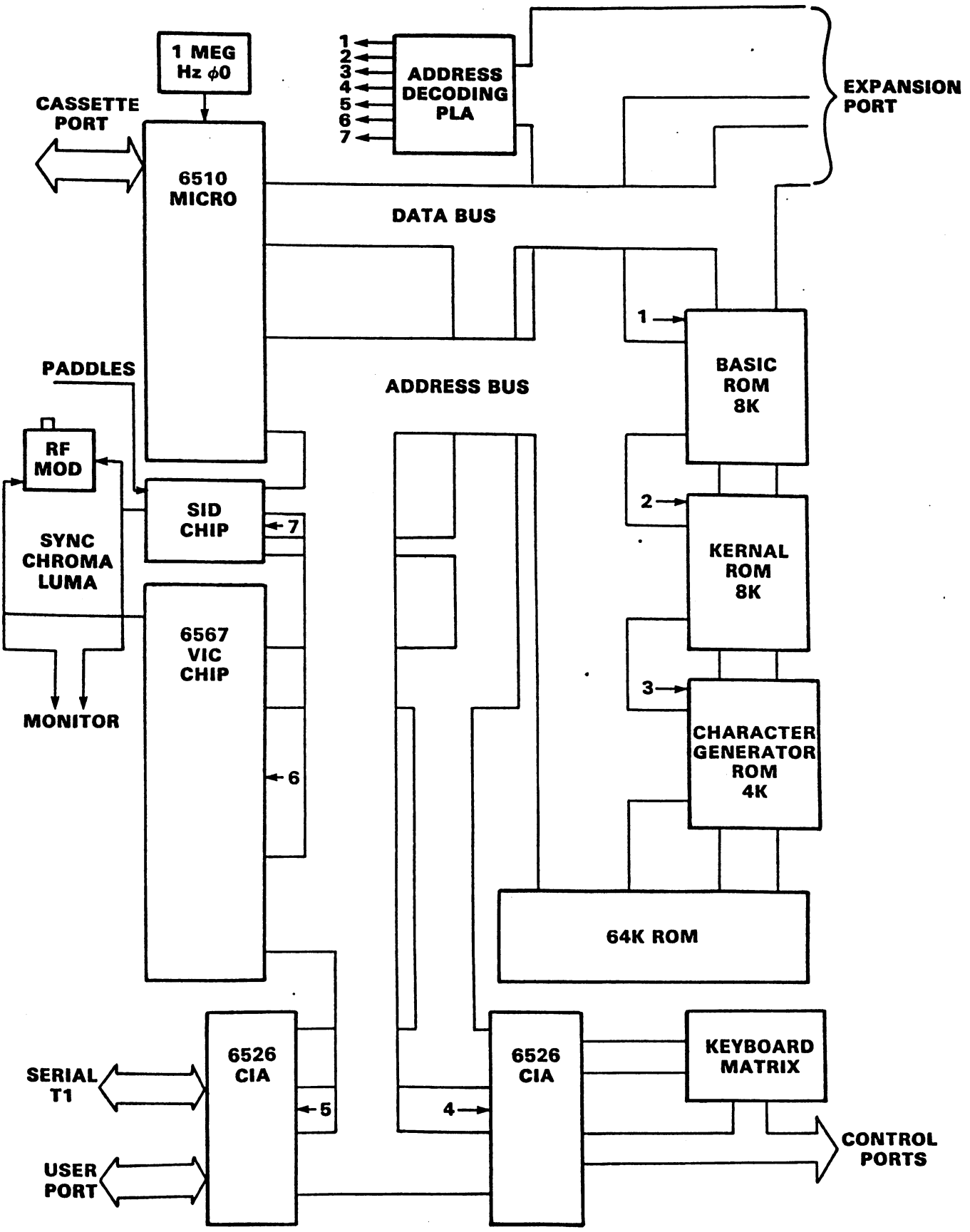

There are three versions of the C64. The C64 with a five pin connector video output (326106), The C64 with an eight pin connector video output (251138), and the C64B which has improved system clock circuit design (251469). Most circuit theory explanations will be the same for all three versions. Refer to schematic 326106 unless noted otherwise.

The Power Supply.

The external power supply generates a regulated 5VDC and 9VAC. 5VDC is applied to pins 5 and 1 of CN7 on the C64 pcb. Filtered by L5,C97, and C100 it is then controlled by on/off switch S1. This 5VDC output supplies the microprocessor logic.

9VAC is applied to pins 6 and 7 of CN7 on the C64 pcb. +12VDC, +5VDC CAN and 9VDC unregulated are outputs that are derived from this 9VAC supply. The 9VAC supply is made available on pins 10 and 11 of the USER PORT CN2.

12VDC Generation

9VAC is added to 9VDC through CR6, and rectified by CR5. The unregulated DC output is filtered by C88 and C89 then regulated at 12VDC by VR1. The regulated output is filtered by C57 and C59. The 12VDC supplies the VIC and SID IC, and the audio amplifiers.

+5VDC CAN Generation

9VAC is rectified by CR4. The unregulated DC output is filtered by C19, and C95 then regulated at 5VDC by VR2. The regulated output is filtered by C102 and C103. The output called 5VDC CAN is separated and individually filtered into two outputs called Vvid and Vc. Vvid is the 5VDC supply for the video circuits, and Vc is the 5VDC supply for the clock circuits.

9VDC Unregulated Generation.

CR4 rectifies the 9VAC input. The output is 9VDC unregulated. This supply powers the cassette motor transistor amplifier circuits, and the RF modulator on the C64B version.

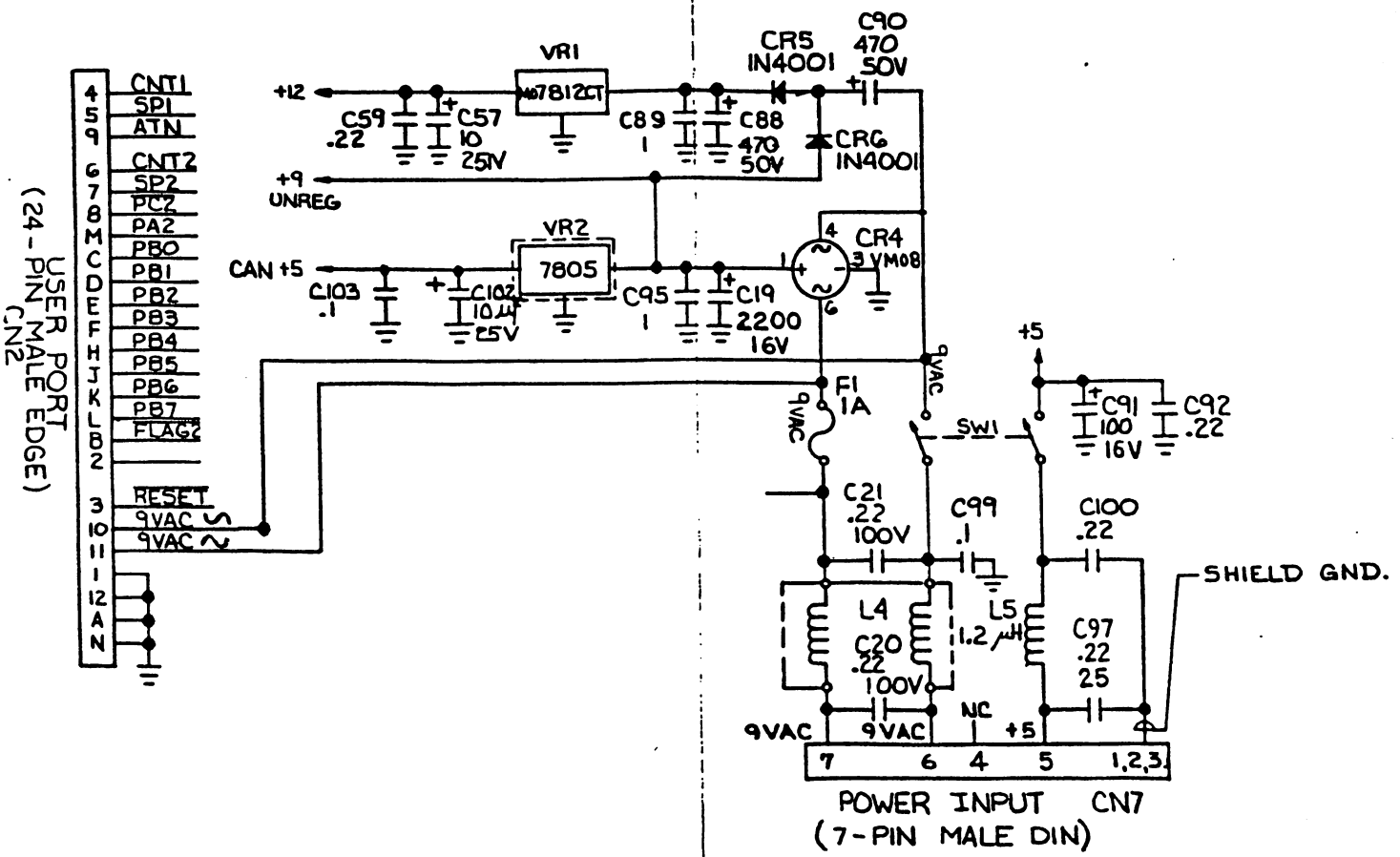
USER PORT
(24-PIN MALE EDGE)
CN2
CNT1
SP1
ATN
CNT2
SP2
PC2
PA2
PB0
PB1
PB2
PB3
PB4
PB5
PB6
PB7
FLAG2
RESET
9VAC
9VAC
+12
VR1
7812CT
C59 .22
C57 10 25V
C89 1
C88 470 50V
CR5 IN4001
C90 470 50V
CR6 IN4001
+9 UNREG
VR2
7805
CAN +5
C103 .1
C102 10µ 25V
C95 1
C19 2200 16V
CR4 3VM08
F1 1A
9VAC
SW1
+5
C91 100 16V
C92 .22
C21 .22 100V
C99 .1
C100 .22
L4
C20 .22 100V
L5 1.2µH
C97 .22 25
SHIELD GND.
9VAC
9VAC
NC
+5
7
6
4
5
1,2,3
POWER INPUT CN7
(7-PIN MALE DIN)

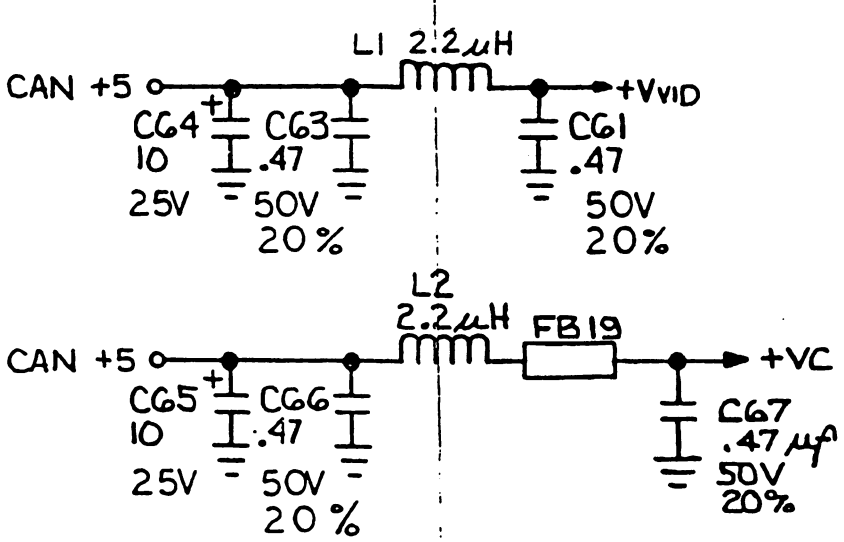
L1 2.2µH
CAN +5
+VVID
C64 10 25V
C63 .47 50V 20%
C61 .47 50V 20%
L2 2.2µH
FB19
CAN +5
+VC
C65 10 25V
C66 .47 50V 20%
C67 .47µf 50V 20%

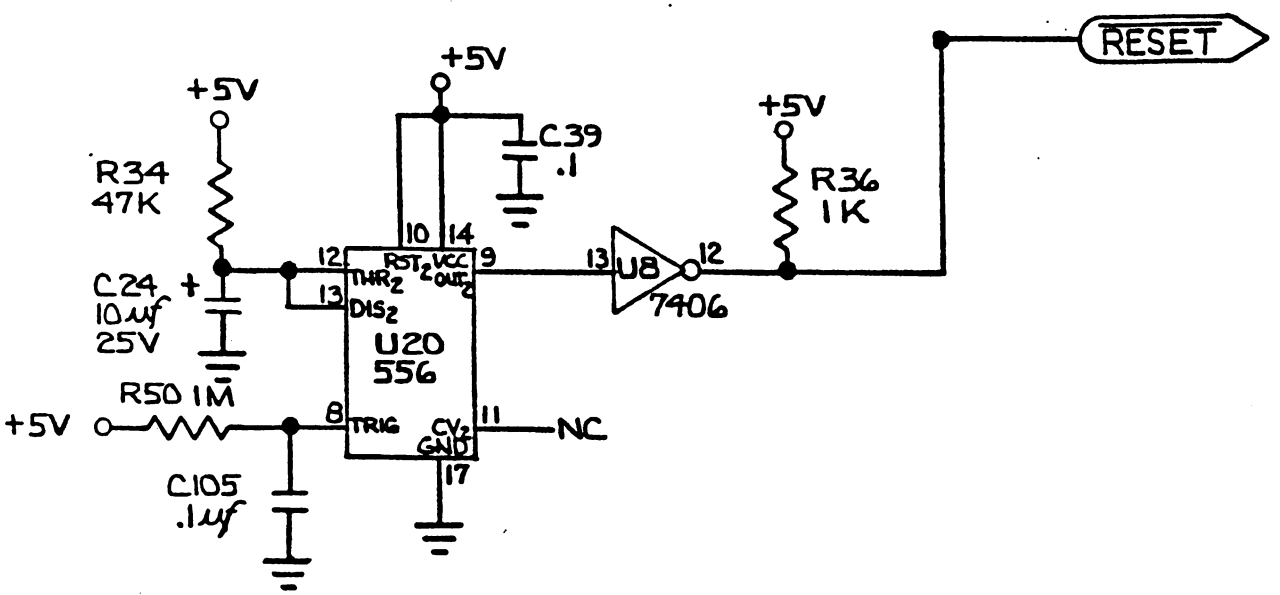

Reset Logic Circuits.

U20 is a 556 IC timer configured as a one shot multivibrator. The output pulse width is determined by the size of R34 and C24. Pulse width = 1.1 x R34 x C24 ≈ .5 seconds. The output on pin 9 is "high" active. The output of U8 is "low" active. Reset initializes all the processor logic and causes the processor to load the program counter register with the address of the first instruction of the operating system program called the KERNAL. The starting address is stored in locations $FFFC and $FFFD. The first instruction is decoded and executed giving KERNAL control of the computer operations. The reset pulse occurs when turning the power on to the computer.

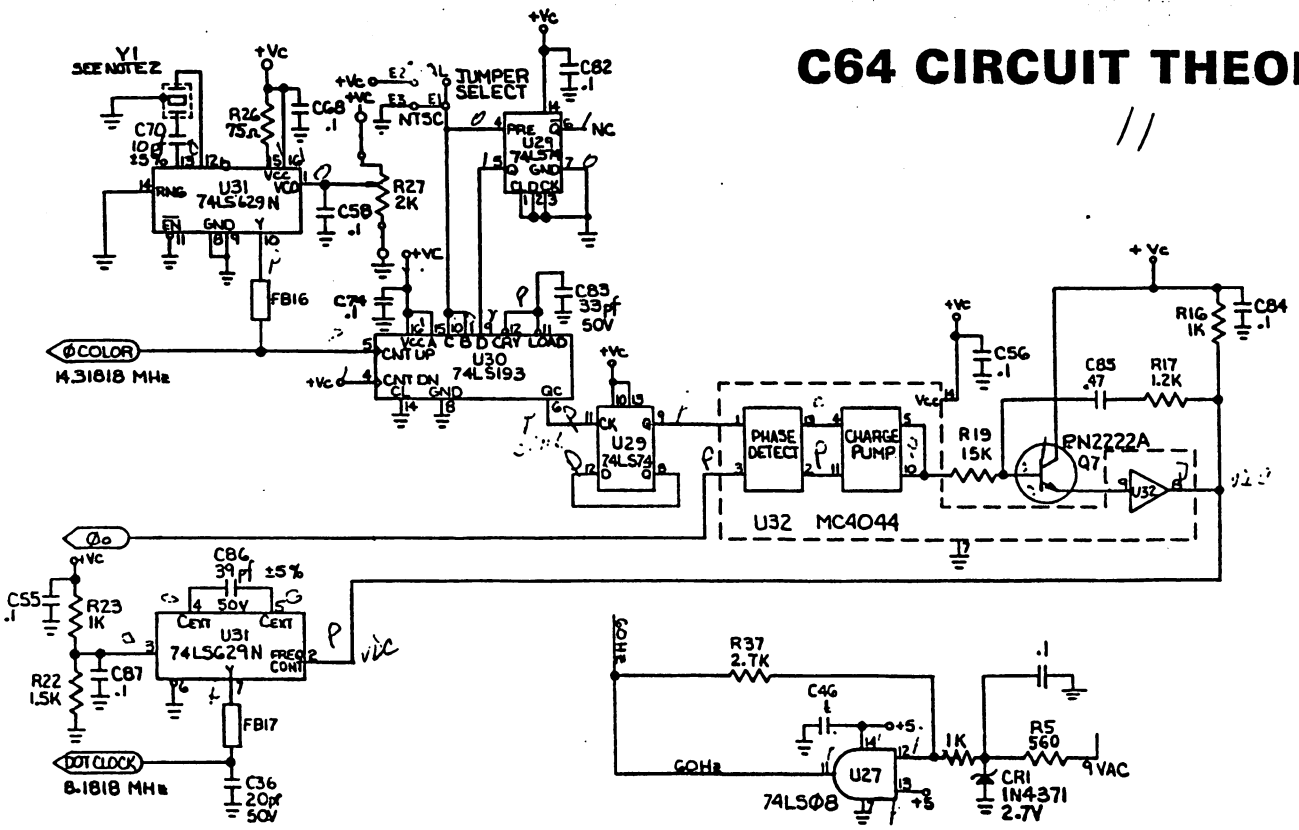

The C64 Clock Circuits.

Crystal Y1 develops a 14.31818MHz fundamental frequency clock signal. U31 is a Dual Voltage Controlled Oscillator. The output on pin 10 is a 14.31818 MHz clock signal called the color clock. R27 can be adjusted to obtain exact output frequency. U30 is a frequency divider that outputs a 2MHz signal on pin 6. U29 is a D flip flop which outputs a 1MHz signal on pin 9. U32 is a Phase/Frequency Detector which compares the output of the U29 to the phase 0 clock, and outputs a dc voltage on pin 8 that is proportional to the phase difference between the inputs. The second half of the Dual Voltage Controlled Oscillator U31 generates an 8.1818MHz clock signal called the DOT Clock. The VIC IC divides the DOT clock by eight and outputs this as the phase 0 clock on pin 17. The output of the Phase/Frequency Detector is applied to the frequency control input pin 2 of U31. This causes tracking of the dot clock and the color clock because one input, pin 3 of U32, is the phase 0 clock which is derived from the dot clock, and the other input pin 1 of U32, is derived from the color clock.

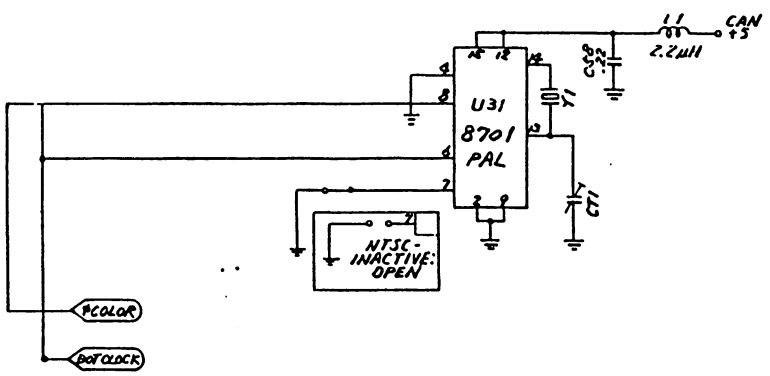

The C64B Clock Circuits. Refer to schematic 251469

Crystal Y1 develops the fundamental 16MHz clock signal. U31 is a Clock Generator IC that outputs the 8.1818MHz DOT clock on pin 6, and the 14.31818 MHz color clock on pin 8.

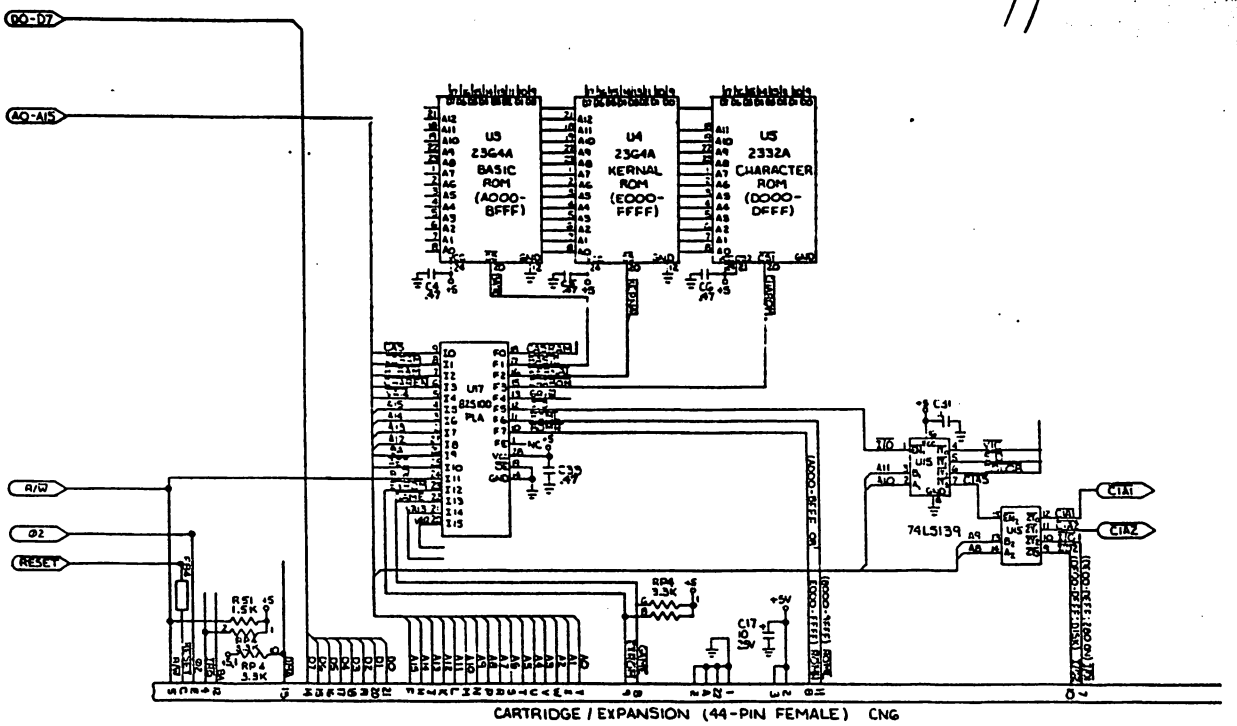

I/O and ROM Address Decoding and Expansion Port.

I/O Address Decoding Logic.

U17 is a Programmable logic array (PLA). The output F5 on pin 12 called I/O goes "low" when any of the I/O devices controlled by U15 are selected. The addresses are listed below for each device.

VIC IC	$D000 - $D02E
SID IC	$D400 - $D7FF
Color Ram	$D800 - $DBFF
CIA1	$DC00 - $DC0F
CIA2	$DD00 - $DD0F
I/O 1	$DE00 - $DEFF
I/O 2	$DF00 - $DFFF

ROM Address Decoding.

Basic ROM resides at locations $A000 - $BFFF. The output F1 pin 17 of the PLA U17 goes "low" when the BASIC ROM is selected. The KERNAL ROM resides at locations $E000 - $FFFF. The output F2 pin 16 of the PLA U17 goes "low" when the KERNAL ROM is selected. The CHARACTER GENERATOR ROM resides at locations $D000 - $DFFF. The output F3 pin 15 of the PLA U17 goes "low" when the Character Generator ROM is selected.

The Expansion Port Connections.

The expansion port is an extension of the microprocessor address, data, and control bus. ROML decodes addresses $8000 - $9FFF, and ROMH decodes addresses $E000 - $FFFF. These are outputs from the PLA used to select the cartridge inserted in the expansion port. I/O 1 input from U15 decodes addresses $DE00 - $DEFF. I/O 2 output from U15 decodes addresses $DF00 - $DFFF.

U7 — 906107-01
6510 MICROPROCESSOR

PIN ASSIGNMENT

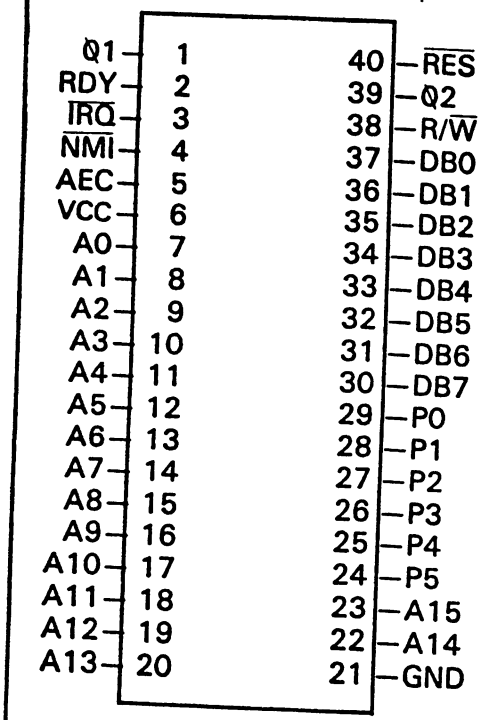

1	Ø1	Phase 1 clock input. This clock input is used to develop the internal overlapping phase 2 clock. 1 MegHz or 2 MegHz speeds.
2	RDY	Single step operation input. A low applied will cause the processor to halt. The current address line being fetched will be on the address bus. Can also be used to interface slower devices to the microprocessor.
3	IRQ	Interrupt request input. When a low pulse is applied a jump to a location specified by the contents of FFFE and FFFF will occur to service the interrupt, if the interrupt mask flag is not set. This is a maskable interrupt.
4	NMI	Non-maskable interrupt input. A low transition will cause a jump to a location specified by FFFA and FFFB to a subroutine which will service the interrupt.
5	AEC	Address enable control input. A low applied to will cause the address bus to enter hi impedance state, so other devices can control the address bus.
6	VCC	5VDC input.
7-20 22,23	A0-A15	Address bus outputs. Unidirectional bus used to address memory and I/O devices. The address bus can be disabled by controlling the AEC input.
21	GND	Dc ground connection.
24-29	P0-P5	I/O bidirectional port. This port can be controlled via memory locations 0000 and 0001. 0001 = Output register 0000 = Data direction register
30-37	DB0-DB7	Bidirectional data bus. This is the bus that passes the data to or from any I/O device or memory.
38	R/W	Read/Write output. The processor generates a low level when writing, and a high level when reading. This signal is usually decoded for read or write operations to memory or I/O.
39	Ø2	Phase 2 output. The processor generates this clock signal from the phase 1 clock applied. The two clock signals are 180 degrees out of phase. The phase 2 clock is used in decoding I/O and memory on the positive half cycle.
40	RES	Reset input interrupt. A low pulse causes a jump to a subroutine specified by FFFC and FFFD, which will initialize all processor controlled devices. This occurs during a power up sequence.

PIN ASSIGNMENT

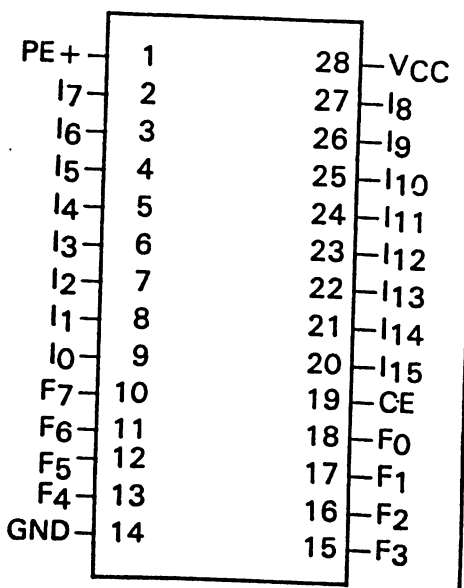

U17 — 906114-01
PROGRAMMABLE LOGIC ARRAY (PLA)

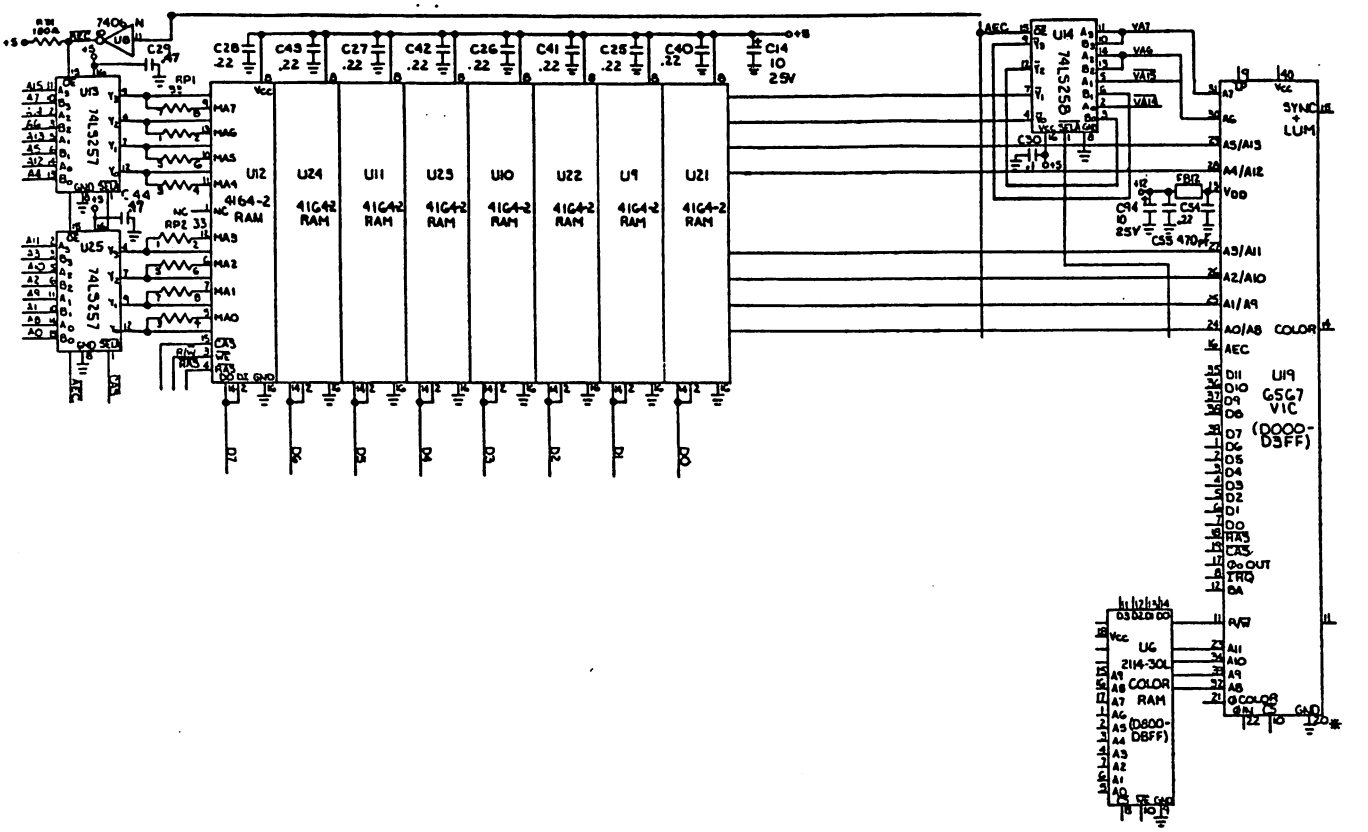

RAM Control Logic.

U13 and U25 are multiplexers. The address outputs from the microprocessor are passed to RAM via U13 and U25 when the output Address Enable Control (AEC) from the VIC IC is "high". When AEC is "low" the VIC IC outputs refresh addresses on pins 24 - 31. AEC goes "low" when the system clock, phase 2, is "low". Since all I/O decoding occurs when phase 2 is "high", refresh is transparent to the processor.

Eight 4164 DRAMS provide 64k bytes of memory. One 2114 RAM (U6) provides 512 bytes of memory allocated for screen color data storage.

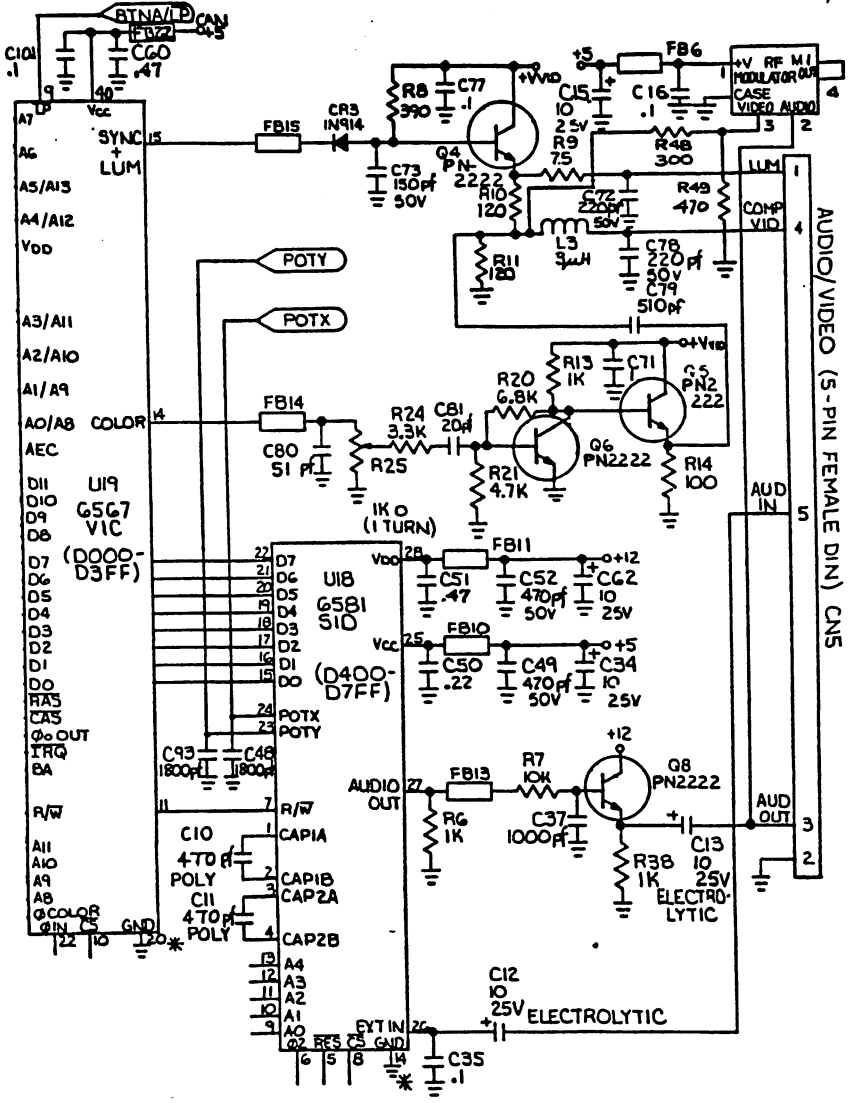

5 Pin Video and Audio Output Circuits.

Pin 15 of the VIC IC is the sync/luminance output. Pin 14 is the color output. A composite video output is created by mixing sync/luminance and color. The composite output is applied to the RF modulator, and also passed to the monitor connector CN5 on pin 4. The color output is not made available on the monitor connector CN5 as on the 8 pin version, and the RF modulator mixes audio with the composite video producing the TV RF output, unlike the 8 pin version RF modulator which creates the composite video output.

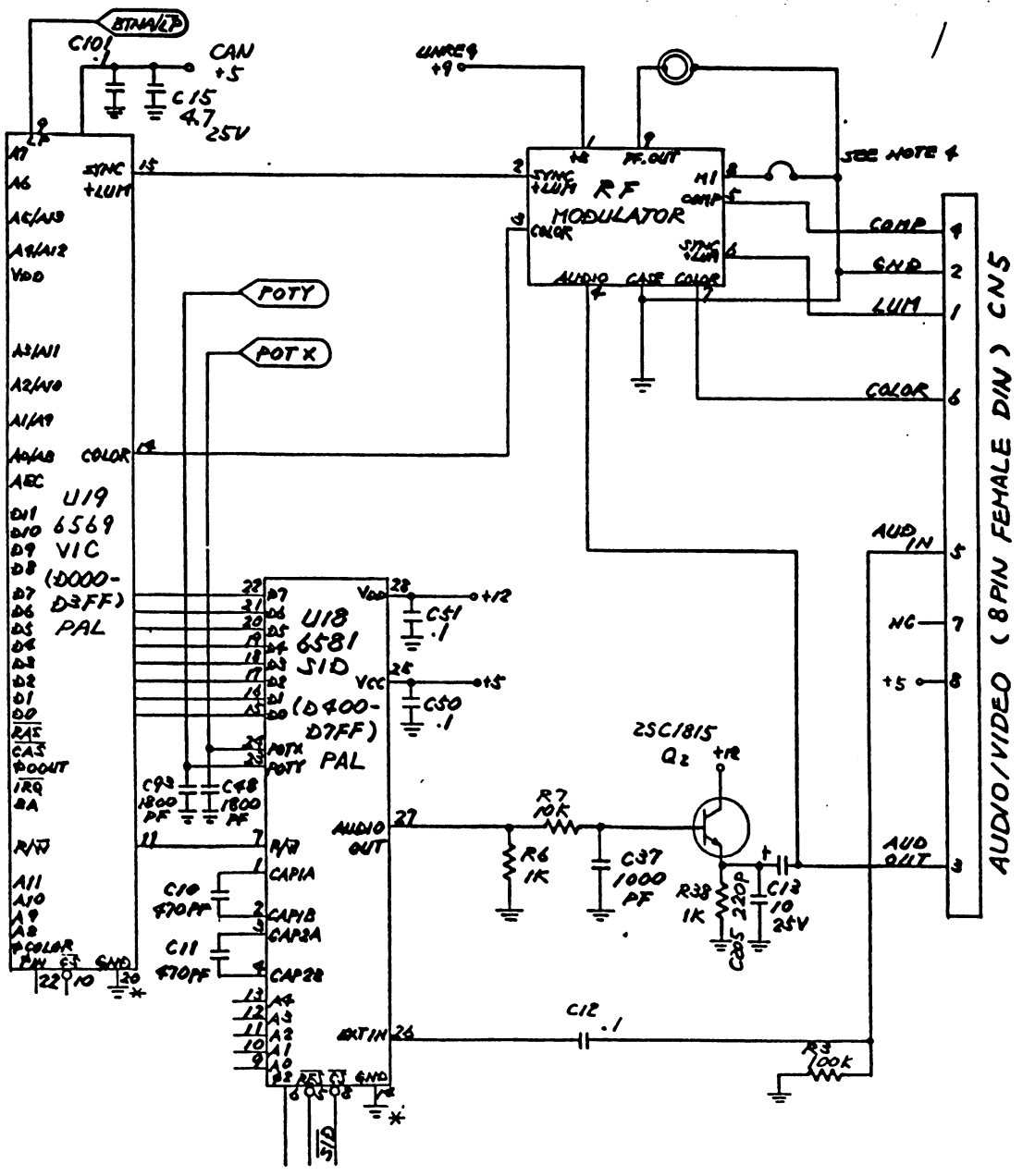

8 Pin Video and Audio Output Circuits. Refer to schematic 251469

U19 is the Video Interface Chip (VIC). Sync (horizontal and vertical), and luminance (video) is output on pin 15. This signal is passed to pin 2 of the RF modulator. Color is output on pin 14, and passed to pin 3 of the modulator. Light Pen inputs are sensed by the VIC IC on pin 9. U18 is the Sound Interface Device IC (SID). The audio output is on pin 27, and audio input is on pin 26. The RF modulator mixes sync/luminance, color, and audio out, generating a TV composite signal on pin 5. The RF modulator also passes the VIC outputs to the monitor connector CN5. Audio out on pin 27 is amplified by Q2, and output on pin 3 of CN5. Audio in is applied to pin 5 of CN5, then to pin 26 of the SID IC. Inputs from paddles connected to one of the control ports are monitored by the SID IC on pins 23 and 24.

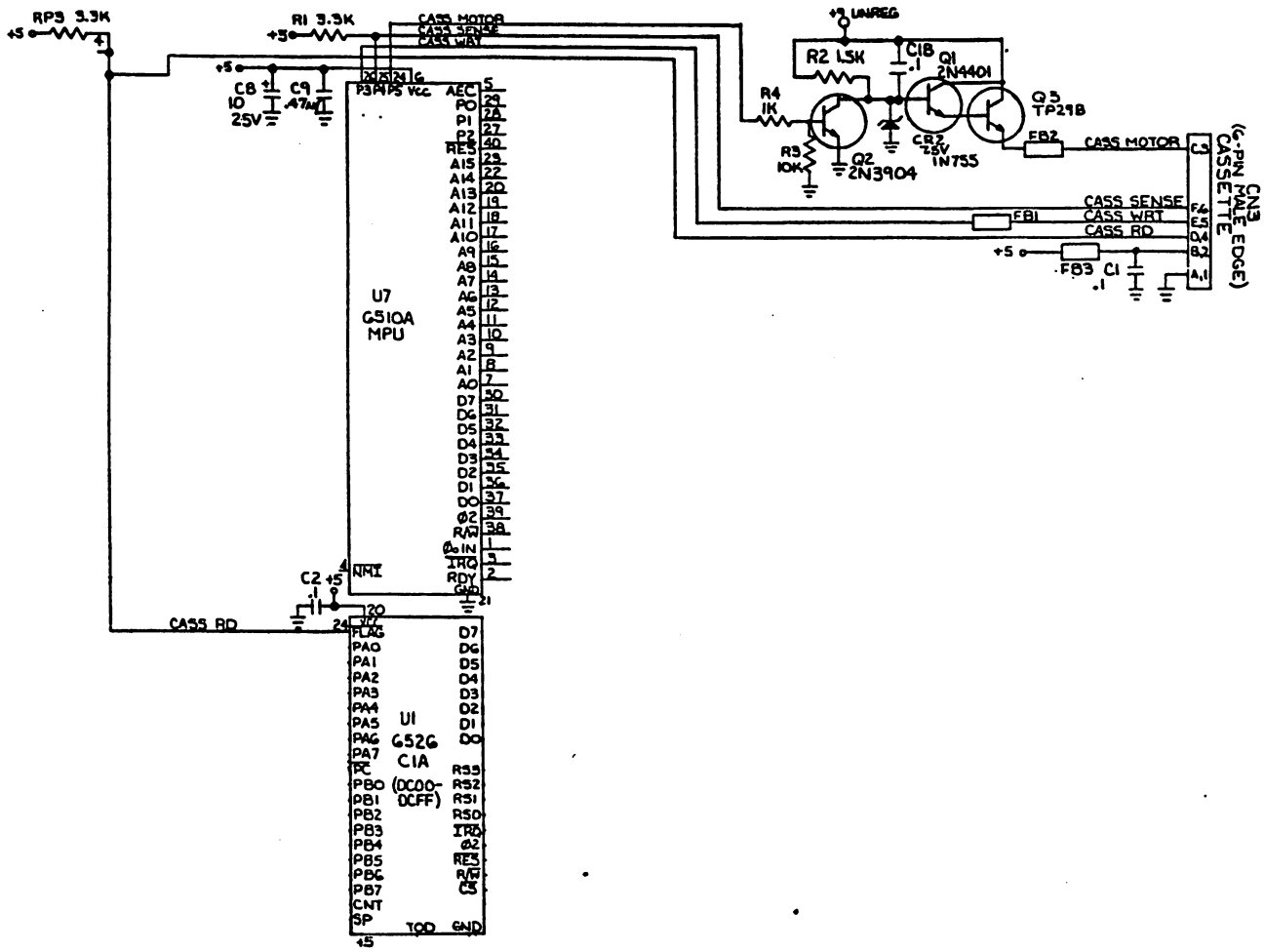

The Cassette Interface Circuits.

U7 is a 6510 microprocessor. One of the features of the 6510 is a built in parallel I/O port (P0-P5). P3 - P5 control most of the cassette interface circuitry. P3 pin 26 of U7 outputs the write data signal to connector CN3 on pins E and 5. P4 is an input that senses the play switch depressed on the cassette deck. P5 is an output that controls the cassette motor. When P5 goes "low", Q2 cuts off, CR2 regulates Vb of Q1 at 7.5 volts, this forward biases Q1 and Q3, passing current through the cassette motor coil. U1 is a Complex Interface Adapter (CIA). Parallel ports, serial outputs, and Timers are standard features of the CIA. Read data enters on pins D, 4 of CN3. U1 accepts the read data signal on the FLAG input pin 24.

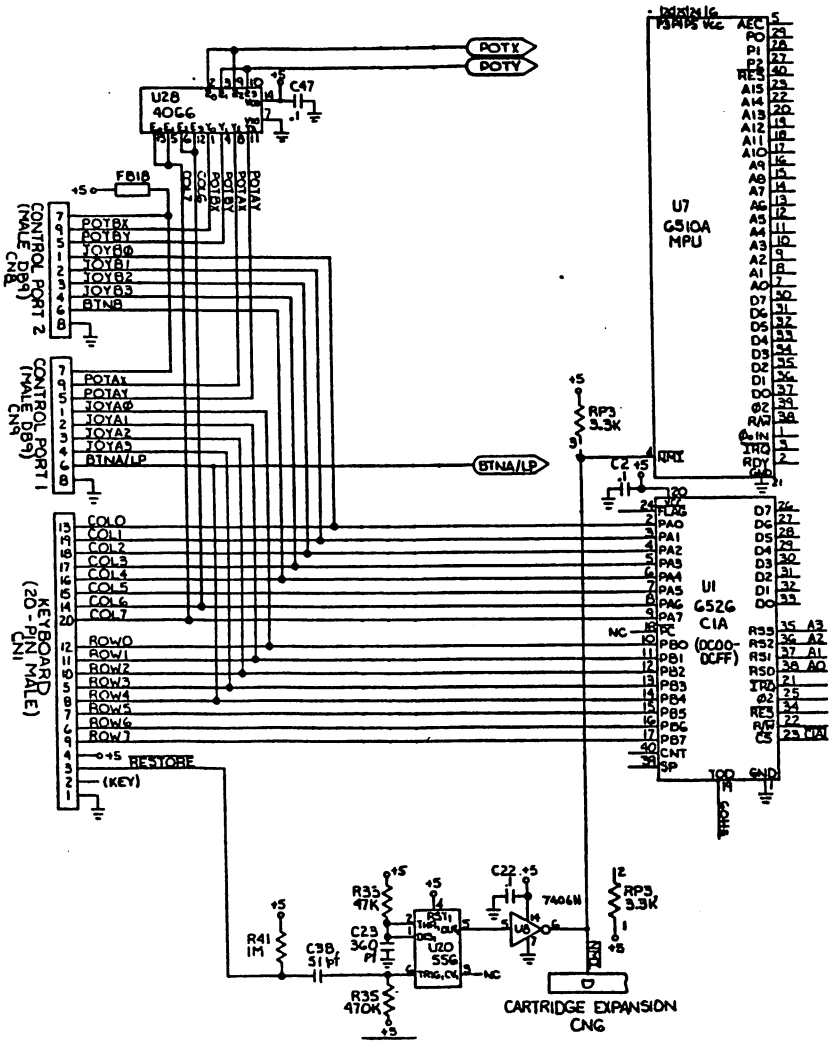

Keyboard, Joystick, and Paddle Interface Circuits.

Keyboard Interface.

U1 is a Complex Interface Adapter (CIA). Both parallel ports are used to decode the keyswitches on the keyboard. Parallel port A signals (PA0 - PA7) are outputs. Parallel port B signals (PB0 - PB7) are inputs. A "0" bit is shifted through the parallel port A, when a key is depressed on the keyboard, the "0" bit is returned on one of the parallel port B inputs. A program in the KERNAL ROM generates the shifting "0" bit output on parallel port A, and decodes the signals returning on the parallel port B inputs. Depressing the restore key causes U20 to trigger. U8 pin 6 goes "low" generating a Non-Maskable Interrupt (NMI) at the processor. This causes the processor to execute a subroutine which initializes the I/O Interfaces. If the STOP key is depressed at the same time, BASIC flags are also initialized.

PARTS LIST — PCB ASSEMBLY #326298 (Continued)

C — Indicates Commodore Stocked Part Numbers

CAPACITORS (Continued)		
C38	Ceramic	51 pF, 50V
C39	Ceramic	.1 μF, 50V
C40-43	Ceramic	.22 μF, 50V
C44	Ceramic	.47 μF, 50V, 20%
C45,46,47	Ceramic	.1 μF, 50V
C48	Ceramic	1800 pF, 50V
C49	Ceramic	470 pF, 50V
C50	Ceramic	.22 μF, 50V
C51	Ceramic	.47 μF, 50V, 20%
C52,53	Ceramic	470 pF, 50V
C54	Ceramic	.22 μF, 50V
C55	Ceramic	.1 μF, 50V
C56	Ceramic	.1 μF, 50V
C57	Electrolytic	10 μF, 25V, +50%, −10%
C58	Ceramic	.1 μF, 50V
C59	Ceramic	.22 μF, 50V
C60,61	Ceramic	.47 μF, 50V, 20%
C62	Electrolytic	10 μF, 25V, +50%, −10%
C63	Ceramic	.47 μF, 50V, 20%
C64,65	Electrolytic	10 μF, 25V, +50%, −10%
C66,67	Ceramic	.47 μF, 50V, 20%
C68	Ceramic	.1 μF, 50V
C69		
C70	Mica	10 pF, 500V, 5%
C71	Ceramic	.1 μF, 50V
C72	Ceramic	220 pF, 50V
C73	Ceramic	150 pF, 50V
C74	Ceramic	.1 μF, 50V
C77	Ceramic	.1 μF, 50V
C78	Ceramic	220 pF, 50V
C79	Ceramic	510 pF, 50V
C80	Ceramic	51 pF, 50V
C81	Ceramic	20 pF, 50V
C82	Ceramic	.1 μF, 50V
C83	Mica	33 pF, 500V, 5%
C84	Ceramic	.1 μF, 50V
C85	Ceramic	.47 μF, 50V, 20%
C86	Mica	39 pF, 500V, 5%
C87	Ceramic	.1 μF, 50V
C88	Electrolytic	470 μF, 50V
C89	Ceramic	.1 μF, 50V
C90	Electrolytic	470 μF, 50V
C91	Electrolytic	100 μF, 16V
C92	Ceramic	.22 μF, 50V
C93	Ceramic	1800 pF, 50V

CAPACITORS (Continued)		
C94	Electrolytic	10 μF, 25V, +50%, −10%
C95,96	Ceramic	.1 μF, 50V
C97	Ceramic	.22 μF, 25V
C98,99	Ceramic	.1 μF, 50V, 20%
C100	Ceramic	.22 μF, 25V
C101	Ceramic	.1 μF, 50V, 20%
C102	Electrolytic	10 μF, 25V, +50%, −10%
C103	Ceramic	.1 μF, 50V
C105	Ceramic	.1 μF, 50V

CONNECTORS		
CN1	Header Assy, 20 Pin	903331-20
CN4	6 Pin Din	C 903361-01
CN5	5 Pin Din	C 903362-01
CN6	44 Pin Card Edge	C 906100-02
CN7	7 Pin Din	C 906130-01
CN8,9	Plug Assy, 9 Pin Rt. Angle	C 906126-01
CN10	Header Assy, 3 Pin	

MISCELLANEOUS		
L1,2	Coil Inductor 2.2 μH	901151-17
L3	Coil Inductor 3.0 μH	901151-21
L4	Line Filter Assy	C 906127-01
L5	Coil Inductor 1.2 μH	901152-01
Y1	Crystal 14.31818 MHz	C 900558-01
SW1	Rocker Switch DPDT	C 904500-01
VR1	Voltage Regulator MC7812CT	901527-01
VR2	Voltage Regulator MC7805CT	901527-02
M1	Modulator	C 326130-01
F1	Fuse, Normal Blo, 250V, 1.5A	
FB1-23	Ferrite Bead	903025-01
	Connector Panel (ON, OFF, Joystick)	326299-01
	Cartridge Guide	326116-01
	Shield Box	C 326265-01
	Shield Cap	C 326267-01

U1, U2 — 906108-01
6526 COMPLEX INTERFACE ADAPTER (CIA)

PIN ASSIGNMENT

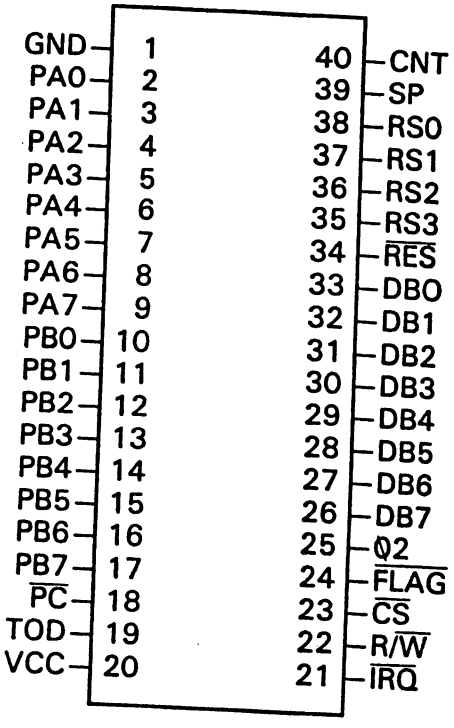

1	VSS	Ground Connection.
2-9	PA0-PA7	Parallel port a signals. Bidirectional parallel port.
10-17	PB0-PB7	Parallel port b signals. Bidirectional parallel port.
18	PC	Handshake output. A low pulse is generated after a read or write on port b.
19	TOD	Time of day clock input. Programmable 50hz or 60hz input.
20	VCC	5VDC input.
21	IRQ	Interrupt output to microprocessor input IRQ.
22	R/W	READ/WRITE input from microprocessor's R/W output.
23	CS	Chip select input. A low pulse will activate CIA.
24	FLAG	Negative edge sensitive interrupt input. Can be used as a handshake line for either parallel port.
25	02	02 clock input. Connected to processor common 02 clock.
26-33	DB0-DB7	Bidirectional data bus. Connects to processor data bus.
34	RES	Low active reset input. Initializes CIA.
35-38	RS0-RS3	Register select inputs. Used to select all internal registers for communications with the parallel ports, time of day clock, and serial port (SP).
39	SP	Serial Port bidirectional connection. An internal shift register converts microprocessor parallel data into serial data, and visa-versa.
40	CNT	Count input. Internal timers can count pulses applied to this input. Can be used for frequency dependent operations.

U18 — 906112-01
6581 SOUND INTERFACE DEVICE (SID)

PIN ASSIGNMENT

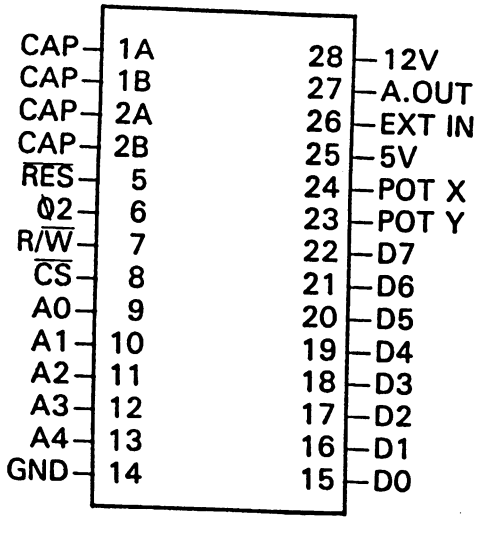

1,2, 3,4	CAP1A,1B 2A, 2B	Capacitor filter connections.
5	RES	Reset input. A low pulse initializes the SID.
6	02	Processor phase 2 clock input.
7	R/W	Processor read/write input.
8	CS	Chip select input.
9-13	A0-A4	Address lines from processor.
14	GND	Dc ground connection.
15-22	D0-D7	Data Bus connections.
23	POT Y	Input to a A/D converter used to detect the value of a variable resistor. Commonly connected to game paddles.
24	POT X	Same as POT Y.
25	VCC	5VDC.
26	EXT IN	External audio input.
27	Audio out	Audio output. Should be AC coupled to audio amp.
28	Vdd	12VDC.

SCHEMATIC #326106 SHEET 1 OF 2

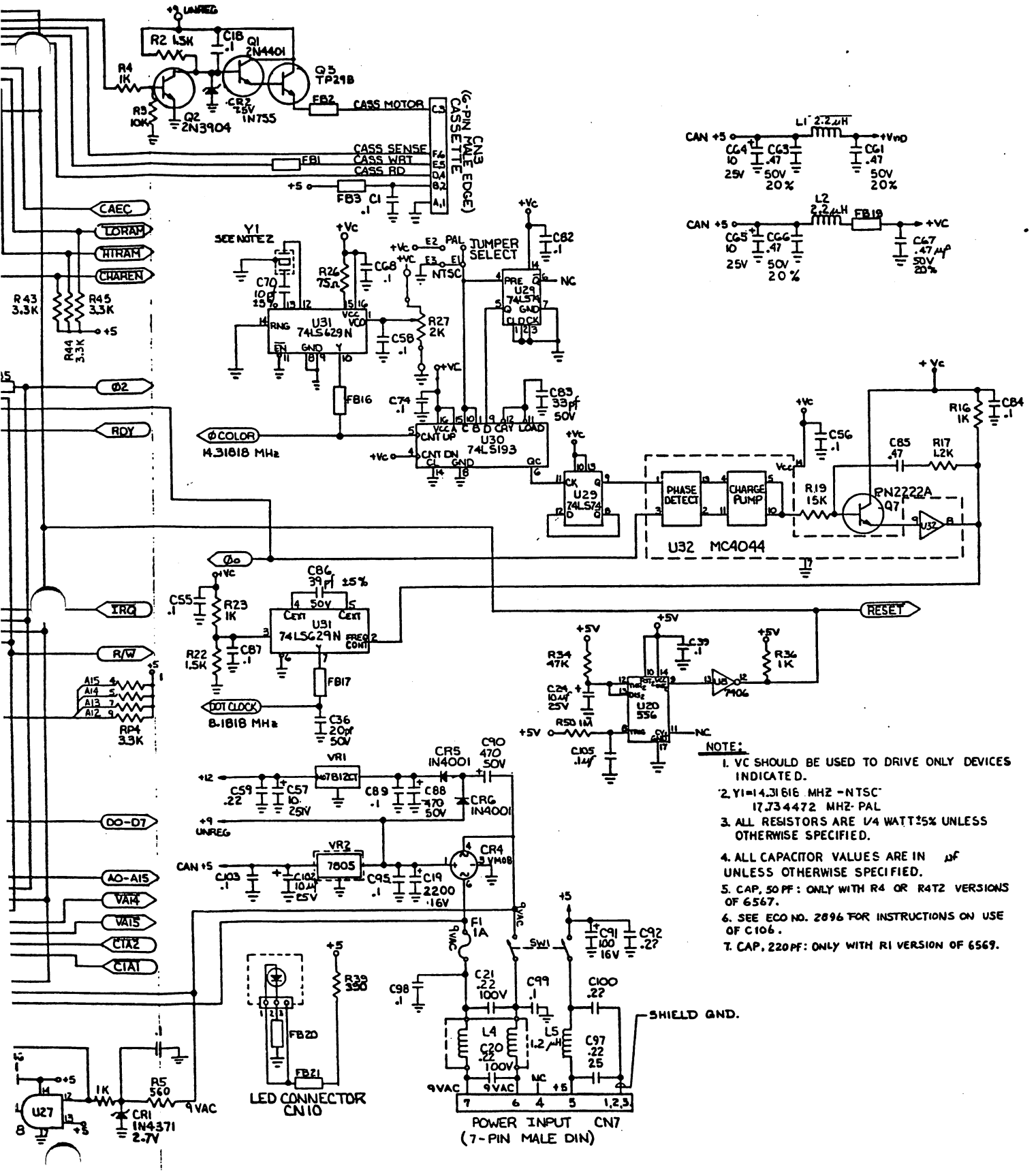

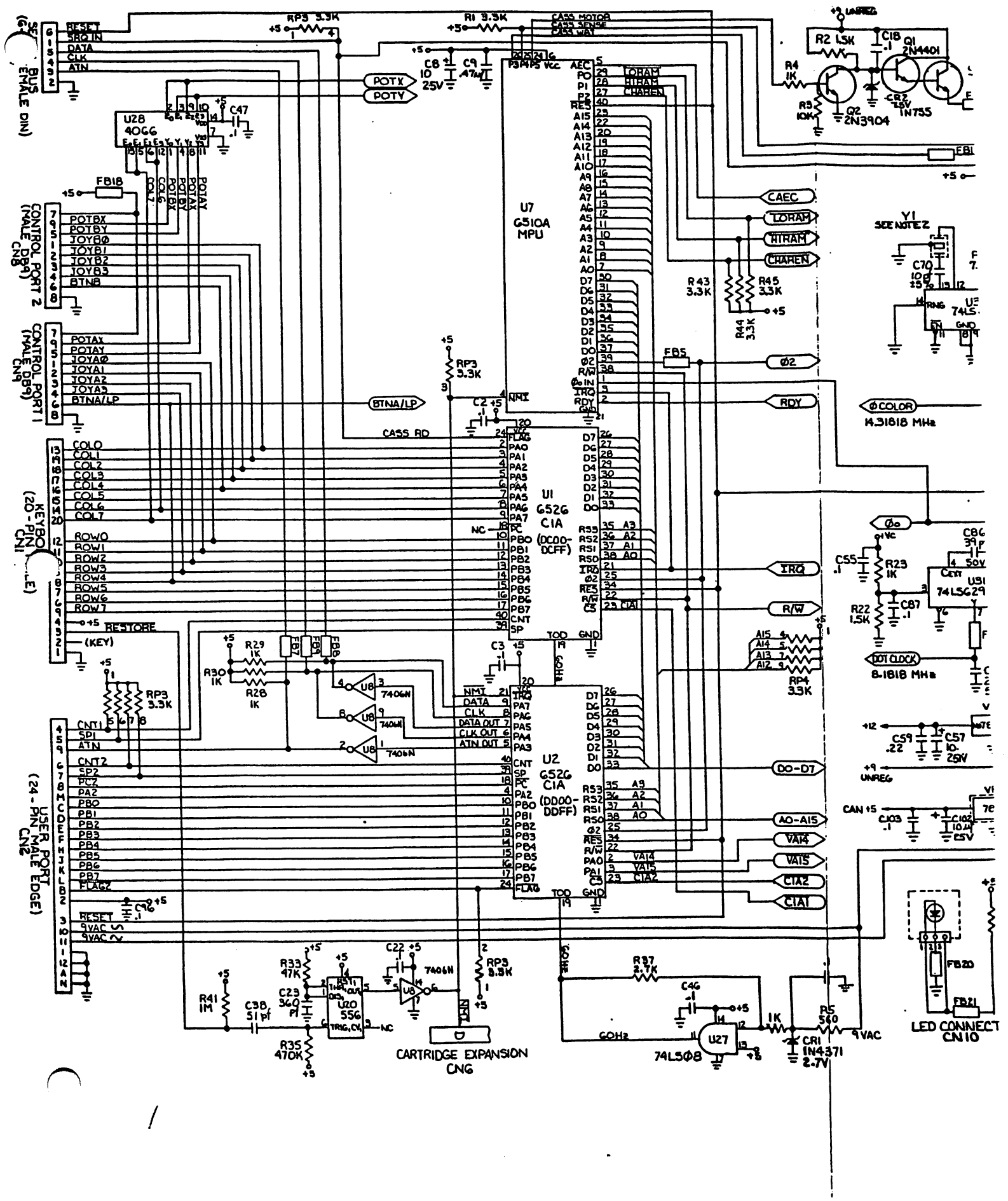
U7
6510A
MPU
U1
6526
C1A
(DC00-DCFF)
U2
6526
C1A
(DD00-DDFF)
U28
4066
U20
556
U27
74LS08
CARTRIDGE EXPANSION
CN6
LED CONNECT
CN10
CONTROL PORT 2
(MALE DB9)
CN8
CONTROL PORT 1
(MALE DB9)
CN9
KEYBOARD
(20-PIN MALE)
CN1
USER PORT
(24-PIN MALE EDGE)
CN2
Y1
SEE NOTE 2
14.31818 MHz
8.1818 MHz
CAEC
LORAM
HIRAM
CHAREN
RDY
IRQ
R/W
DO-D7
A0-A15
VA14
VA15
C1A2
C1A1
POTX
POTY
BTNA/LP
CASS RD
RESTORE
(KEY)
RESET
SRQ IN
DATA
CLK
ATN
CNT1
SP1
ATN
CNT2
SP2
PC2
PA2
PB0
PB1
PB2
PB3
PB4
PB5
PB6
PB7
FLAG2
9VAC
CASS MOTOR
CASS SENSE
CASS WRT
Q1
2N4401
Q2
2N3904
CR2
1N755
CR1
1N4371
2.7V
U31
74LS629
DOT CLOCK
UNREG
CAN +5
60Hz

PIN CONFIGURATION

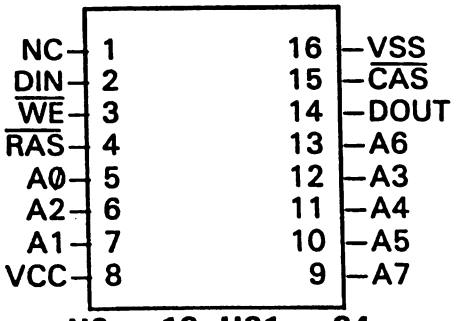

U9 ~ 12, U21 ~ 24
64K DYNAMIC RAM
901505-01

COMMODORE PART NUMBER	APPROVED SOURCE 1 OF SUPPLY	VENDOR PART NUMBER	ACCESS TIME (ns)	CYCLES (ns)	POW ACTIVE (MW)
901505-01	HITACHI	HM4864-3	200	335	330
901505-01	NEC	μPD4164-2	200	375	250
901505-01	MITSUBISHI	M5K416NS-20	200	330	275
901505-01	MOSTEK	MK4564N-20	200	345	300
901505-01	OKI	MSM3764-20	200	330	248
901505-01	HITACHI	HM4864P-3	200	335	330
901505-01	MATSUSHITA (PANASONIC)	MN4164P-20	200	330	275
901505-01	SIEMENS	HYB4164-3	200	330	150
901505-01	SHARP	LH2164-Z1	200	330	248
901505-01	HITACHI	HM4864AP-3	200	330	242
901505-01	TOSHIBA	TMM4164AP-20	200	330	275

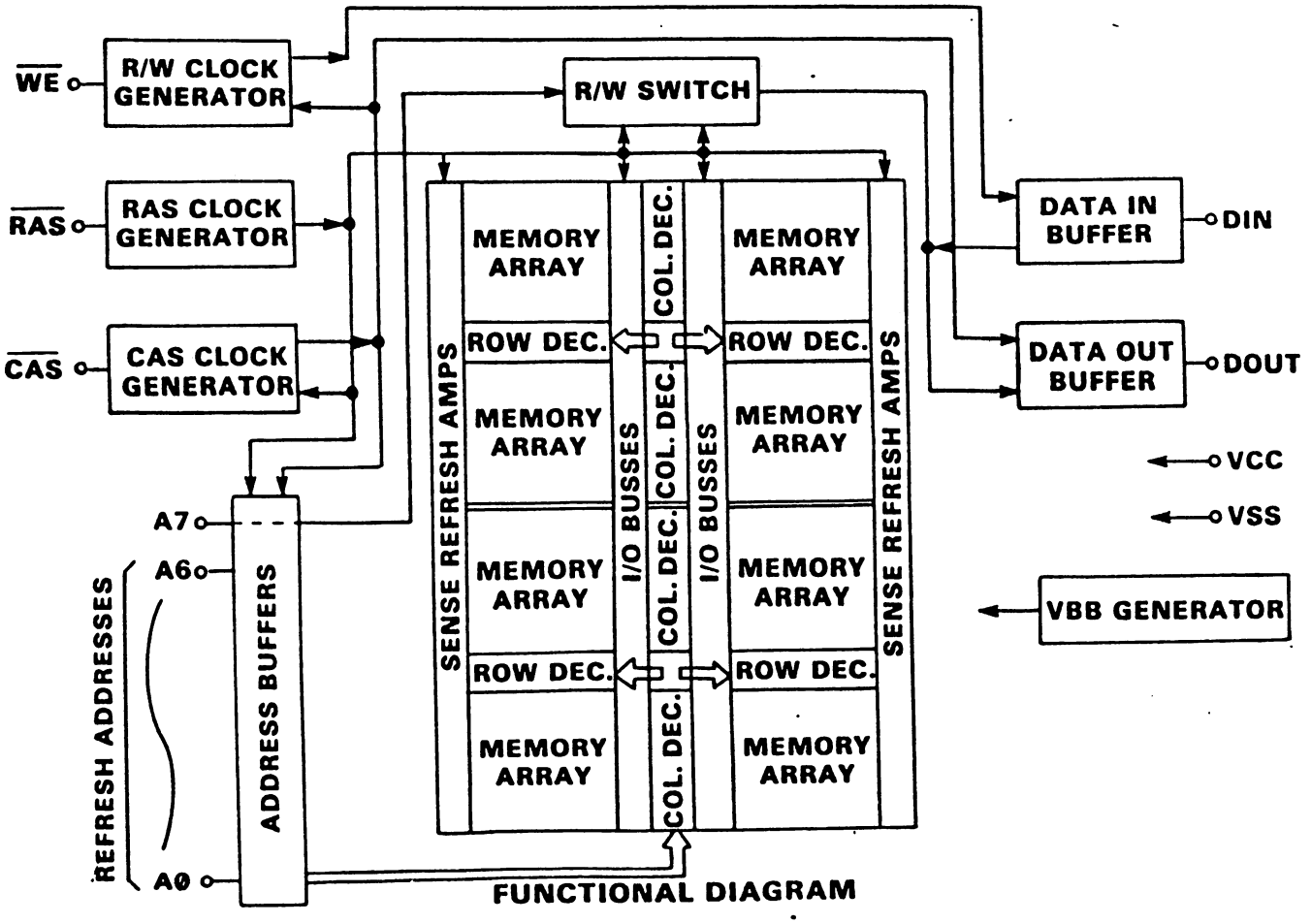

FUNCTIONAL DIAGRAM

ES	POWER	
	ACTIVE (MW)	STANDBY (MAX)(MW)
	330	20
	250	28
	275	28
	300	22
	248	23
	330	20
	275	27.5
	150	20
	248	28
	242	20
	275	22

DIN

DOUT

VCC

VSS

RATOR

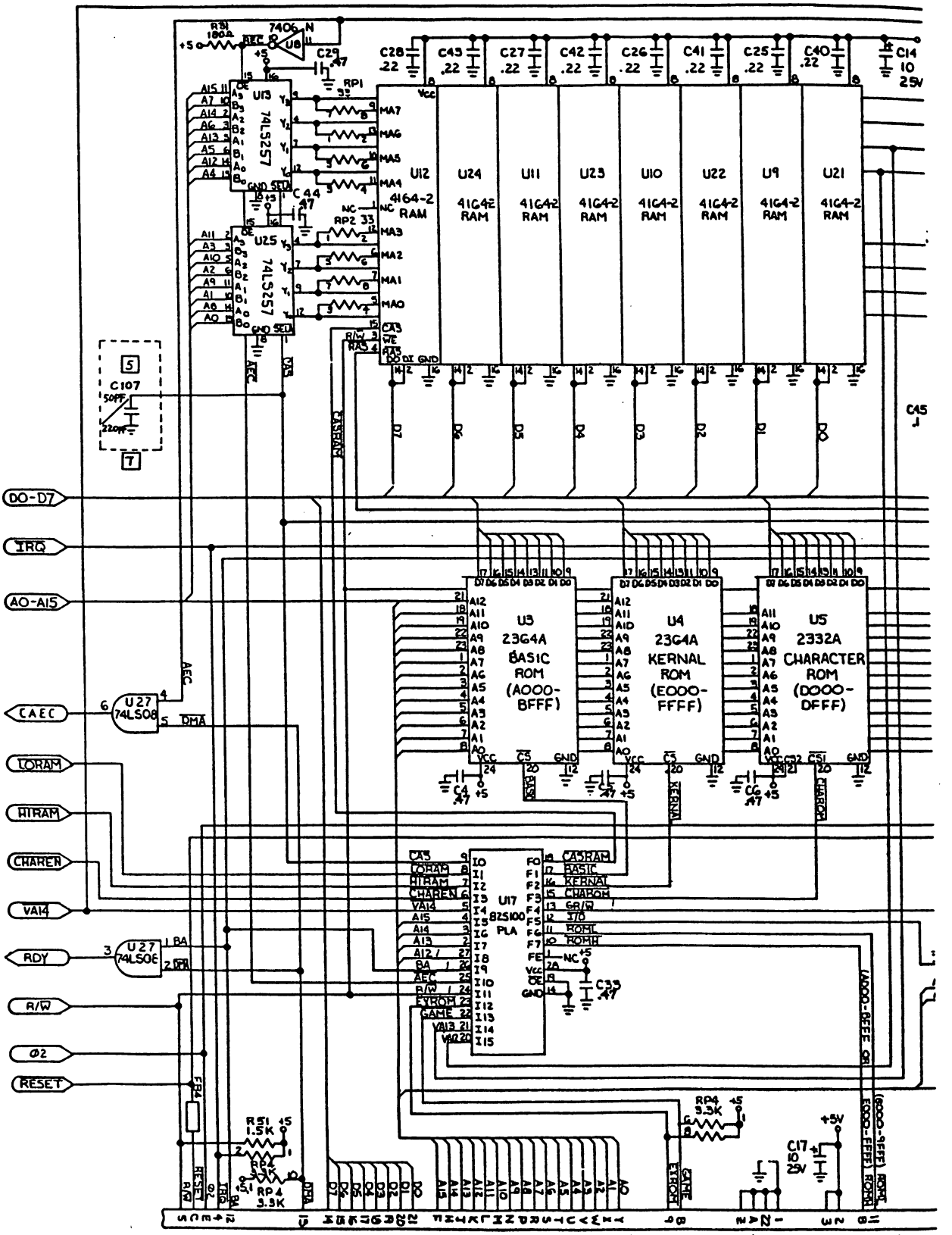

SCHEMATIC #326106 SHEET 2 OF 2

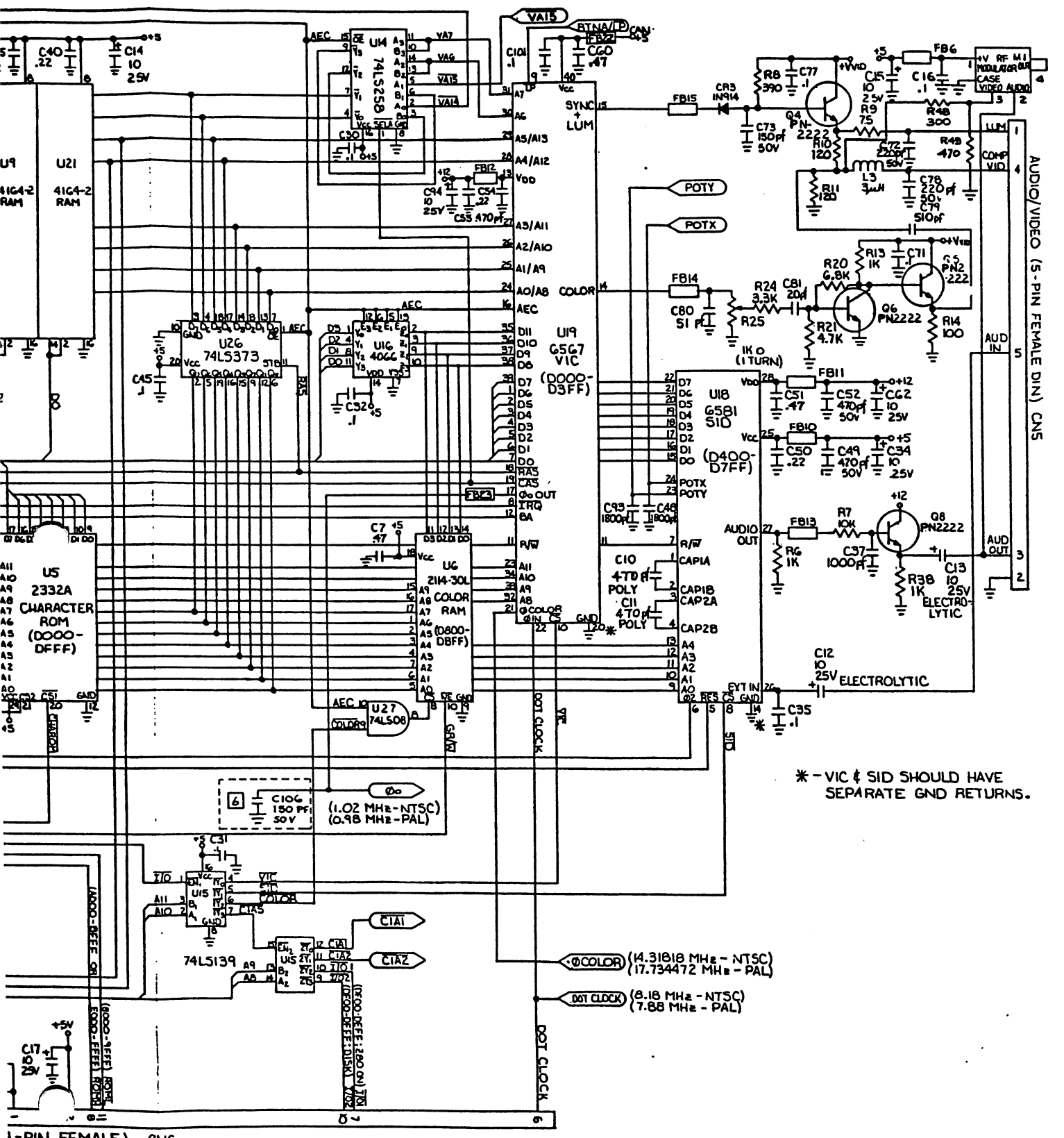

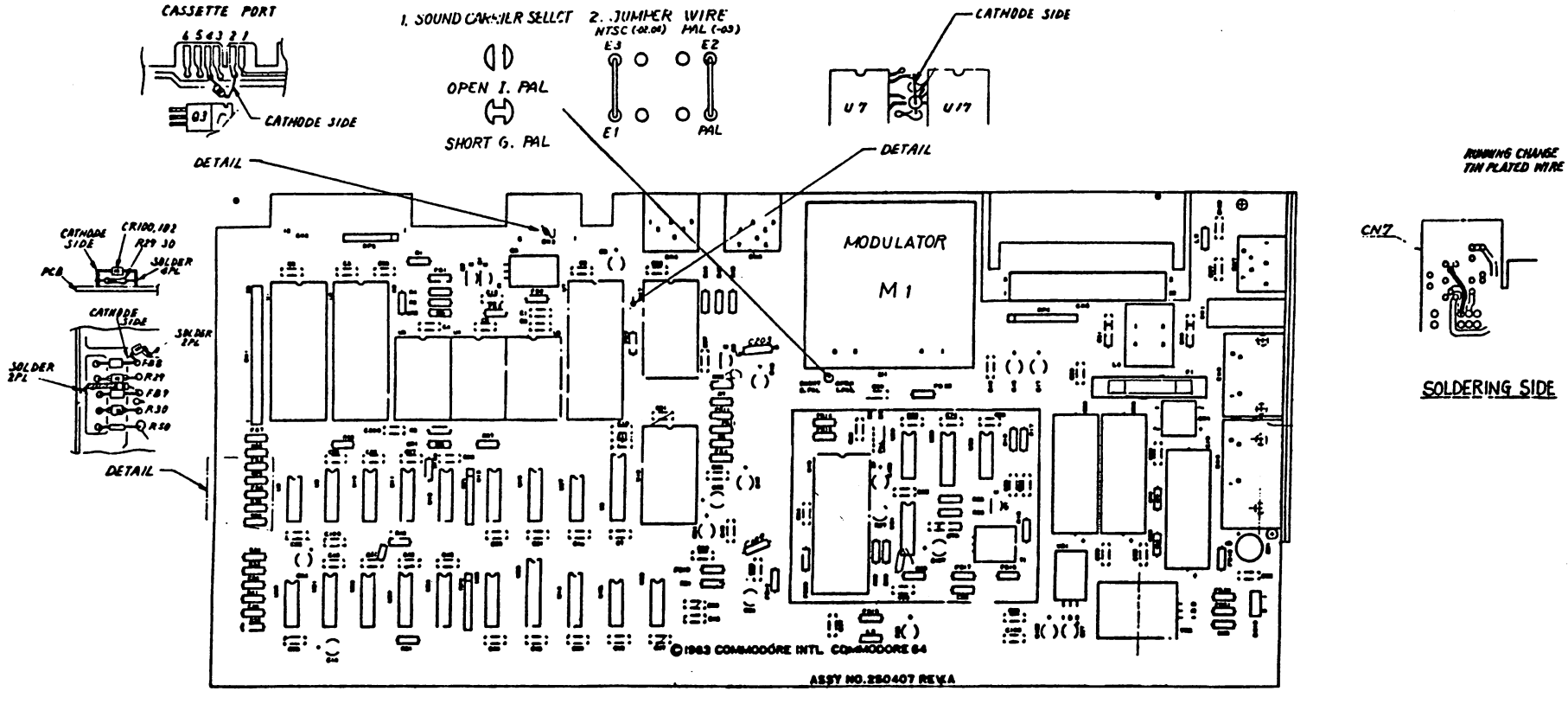

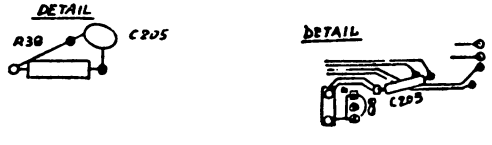

[6] TO FIX HEATSINK TO VOLTAGE REGULATOR SCREW M3x10 AND NUT HEXAGON M3 ARE USED. EYELET CAN SUBSTITUTE.

[5] R101, IT IS SUITABLE FOR 6569 REV.1 AND 6567 REV.5. DO NOT USE FOR 6567 REV.8 OR 6569 REV.3.

[4] C204, IT IS SUITABLE FOR MB112A101.

[3] C203, IT IS SUITABLE FOR 6569 REV.1. BUT WHEN USE 251183 (U17 ITEM 186), DO NOT USE THIS CAPACITOR.

BOARD LAYOUT #250407-04

PARTS LIST — PCB ASSEMBLY #250407-04

C — Indicates Commodore Stocked Part Number

INTEGRATED CIRCUITS

U1,U2	6526 CIA	C 906108-01
U3	2364 Basic ROM	C 901226-01
U4	2364 Kernal ROM	C 901227-03
U5	2332 Char ROM	C 901225-01
U6	2114L-20 RAM	901453-01
U7	6510 μ Processor	C 906107-01
U8	7406	901522-06 sub:
	7416	901522-14
U9-U12	4164 (200 nS)	901505-01
U13	74LS257	901521-57
U14	74LS258	901521-58
U15	74LS139	901521-18
U16	4066	901502-01
U17	82S100 PLA	C 906114-01
U18	6581 SID	C 906112-01
U19	6567 VIC II	C 906109-04
U20	LM556	901523-03
U21-U24	4164 (200 nS)	901505-01
U25	74LS257	901521-57
U26	74LS373	901521-29
U27	74LS08	901521-03
U28	4066	901502-01
U29	74LS74	901521-06
U30	74LS193	901521-26
U31	74LS629	901521-68
U32	MC4044	906128-01

TRANSISTORS

Q1,2	2SC1815	C 902693-01 sub:
Q3	TIP29 A	902653-01
Q7,8	2SC1815	C 902693-01

DIODES

CR1	2.7V Zener IN4371	906103-02
CR2	7.5V Zener IN755	900941-01
CR4	Bridge S2VB10	C 251026-01
	DBA20B	C 251026-02
	DBA20C	C 251026-03
CR5,6	Rectifier IN4001	900750-01

RESISTORS — All values are in ohms- 1/4 W, 5%, unless noted otherwise.

R1	3.3K	R6	1K
R2	1.5K	R7	10K
R3	10K	R16	1K
R4	1K	R17	2.7K
R5	560	R19	15K

RESISTORS (Continued)

R26	Jumper Wire	R39	390
R27	Pot 500Ω	R41	1M
R28	1K	R42	82
R29	1K	R43	3.3K
R30	1K	R44	3.3K
R31	180	R45	3.3K
R33	47K	R50	1M
R34	47K	R51	1.5K
R35	470K	R52	300
R36	1K	R53	390
R37	2.7K	R100	1K
R38	1K	R101	22K

RESISTOR PACKS

RP1,2	33Ω, 8 Pin (Bourns No. 4308R-102-330)
RP3	3.3KΩ, 8 Pin (Bourns No. 4308R-101-332)
RP4	3.3KΩ, 10 Pin

CAPACITORS

C1-7	Ceramic	.1 μF, 25V
C8	Electrolytic	10 μF, 25V, +50%, -10%
C9	Ceramic	.1 μF, 25V
C10,11	Ceramic	470 pF, 50V, 10%
C12	Ceramic	.1 μF, 25V
C13,14,15	Electrolytic	10 μF, 25V, +50%, -10%
C16	Ceramic	.1 μF, 25V
C17	Electrolytic	10 μF, 25V, +50%, -10%
C18	Ceramic	.1 μF, 25V
C19	Electrolytic	2200 μF, 16V
C20,21	Film	.22 μF, 100V, 20%
C22	Ceramic	.1 μF, 25V
C23	Ceramic	360 pF, 50V, 10%
C24	Electrolytic	10 μF, 25V, +50%, -10%
C25-33	Ceramic	.1 μF, 25V
C34	Electrolytic	10 μF, 25V, +50%, -10%
C35	Ceramic	.1 μF, 50V
C36	Ceramic	20 pF, 50V, 5% SL
C37	Ceramic	1000 pF, 50V, 10% B
C38	Ceramic	51 pF, 50V, 5% SL
C39-47	Ceramic	.1 μF, 25V
C48	Ceramic	1800 pF, 50V, 10% B
C49-54	Ceramic	.1 μF, 25V
C55	Ceramic	.1 μF, 50V
C56	Ceramic	.1 μF, 25V
C57	Electrolytic	10 μF, 25V, +50%, -10%
C58	Ceramic	.1 μF, 50V

PARTS LIST — PCB ASSEMBLY #250407-04 (Continued)

C — Indicates Commodore Stocked Part Number

CAPACITORS (Continued)		
C59,60	Ceramic	.1 μF, 25V
C62,65	Electrolytic	10 μF, 25V, +50%, −10%
C66,67,68	Ceramic	.1 μF, 25V
C70	Film	16 pF, 5%
C74,82	Ceramic	.1 μF, 25V
C83	Ceramic	82 pF, 5%
C84	Ceramic	.1 μF, 25V
C85	Ceramic	.47 μF, 50V, 10%
C88	Electrolytic	1000 μF, 25V
C89	Ceramic	.1 μF, 25V
C90	Electrolytic	470 μF, 50V
C91	Electrolytic	100 μF, 16V, +50%, −10%
C92	Ceramic	.1 μF, 25V
C93	Ceramic	1800 pF, 50V, 10% B
C94	Electrolytic	10 μF, 25V, +50%, −10%
C95,96	Ceramic	.1 μF, 25V
C97	Ceramic	.22 μF, 25V
C98,99	Ceramic	.1 μF, 50V, +80%, −20%
C100	Ceramic	.22 μF, 25V
C101	Ceramic	.1 μF, 50V, +80%, −20%
C102	Electrolytic	10 μF, 25V, +50%, −10%
C103	Ceramic	.1 μF, 25V
C104		
C105	Ceramic	.1 μF, 25V
C108	Electrolytic	10 μF, 25V, 20%
C200	Ceramic	.1 μF, 25V

CONNECTORS		
CN1	Header Assy, 20 Pin	903331-20
CN4	6 Pin Din	C 903361-01
CN5	8 Pin Din	C 325573-01
CN6	44 Pin Card Edge	C 906100-02
CN7	7 Pin Din	C 251116-01
CN8,9	Plug Assy, 9 Pin MINID	C 906126-01
CN10	Header Assy, 3 Pin	903332-03

MISCELLANEOUS		
L2	Coil Inductor 2.2 μH	901151-17
L4	Coil Inductor 1.2 μH	325570-01
L5	Choke Coil	C 325559-02
Y1	Crystal 14.31818 MHz	C 900558-01
SW1	Rocker Switch DPDT	904500-01
VR1	Voltage Regulator MC7812CT	901527-01
VR2	Voltage Regulator MC7805CT	901527-02
M1	Modulator	C 251080-01
F1	Fuse, Normal Blo, 250V, 1.5A	
FB1-5 FB7-23	Ferrite Bead	903025-01
	Connector Panel (Power, ON, OFF)	251095-01
	Cartridge Guide	326116-01
	Shield Box	C 251023-01
	Shield Cap	C 251024-01

MODULATOR SCHEMATIC #251025

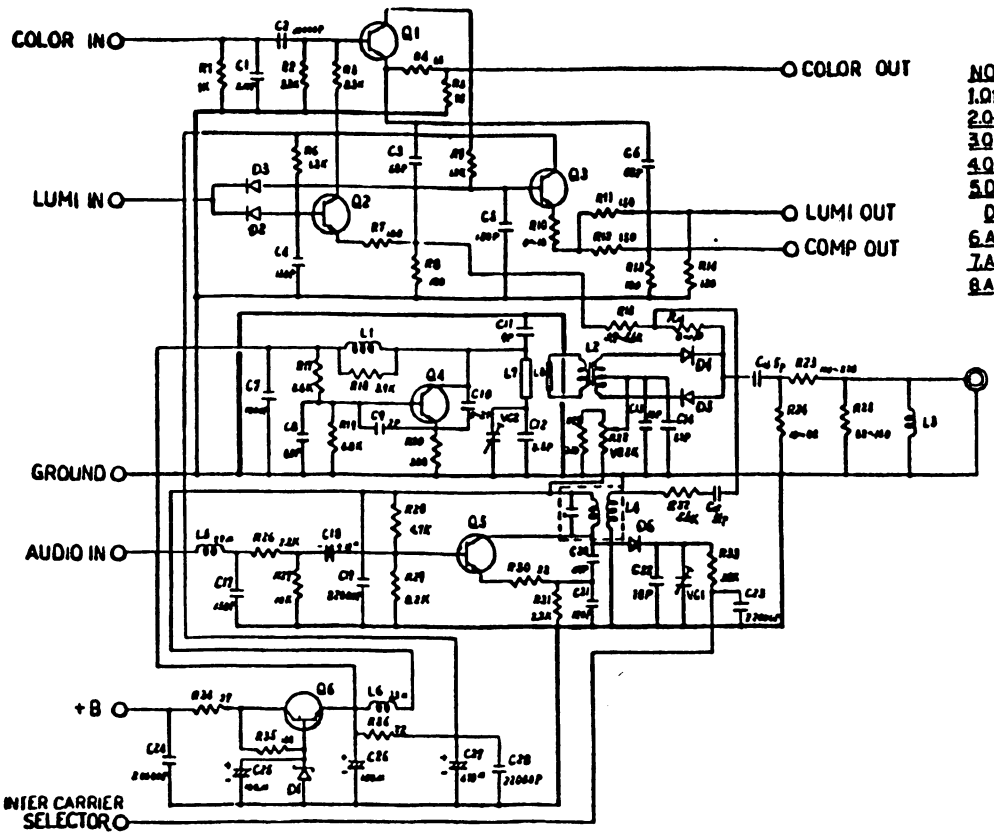

NOTE
1.Q1~Q3:2SC1684 OR EQIVALENT
2.Q4 :2SC1730 OR EQIVALENT
3.Q5 :2SC460 OR EQIVALENT
4.Q6 :2SC2120 OR EQIVALENT
5.D1 :HZ-7 D2,D3:1SS119
D4,D5:1SS86 OR 1SS174 D6:1SS110
6.ALL CAPACITANCE VALUES :F
7.ALL RESISTANCE VALUES :Ω
8.ALL INDUCTANCE VALUES :H

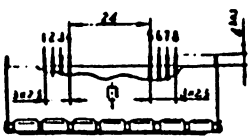

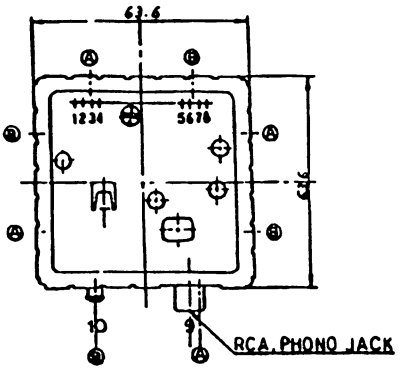

NO	TERMINALS
1	+B
2	SYNC+LUM SIG. INPUT
3	COLOR SIG. INPUT
4	AUDIO SIG. INPUT
5	COMP. SIG. OUTPUT
6	SYNC+LUM SIG. OUTPUT
7	COLOR SIG. OUTPUT
8	INTER CARRIER SELECTOR
9	RF. OUTPUT
10	CHANNEL TRIMMER

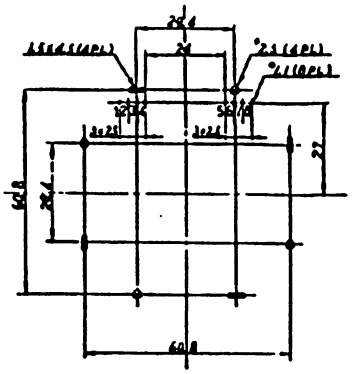

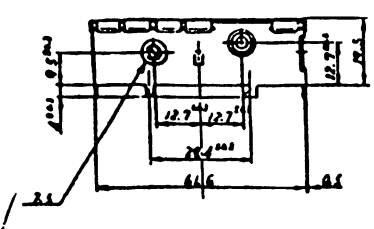

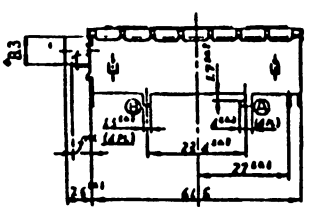

NOTE
1. RECOMMENDED P.C.B. HOLE CENTERS (COMPONENT SIDE)
2. ALL DIMENSION ARE IN MILLIMETERS
3. NO.8 TERMINAL SHORT=G.PAL
OPEN = L.PAL

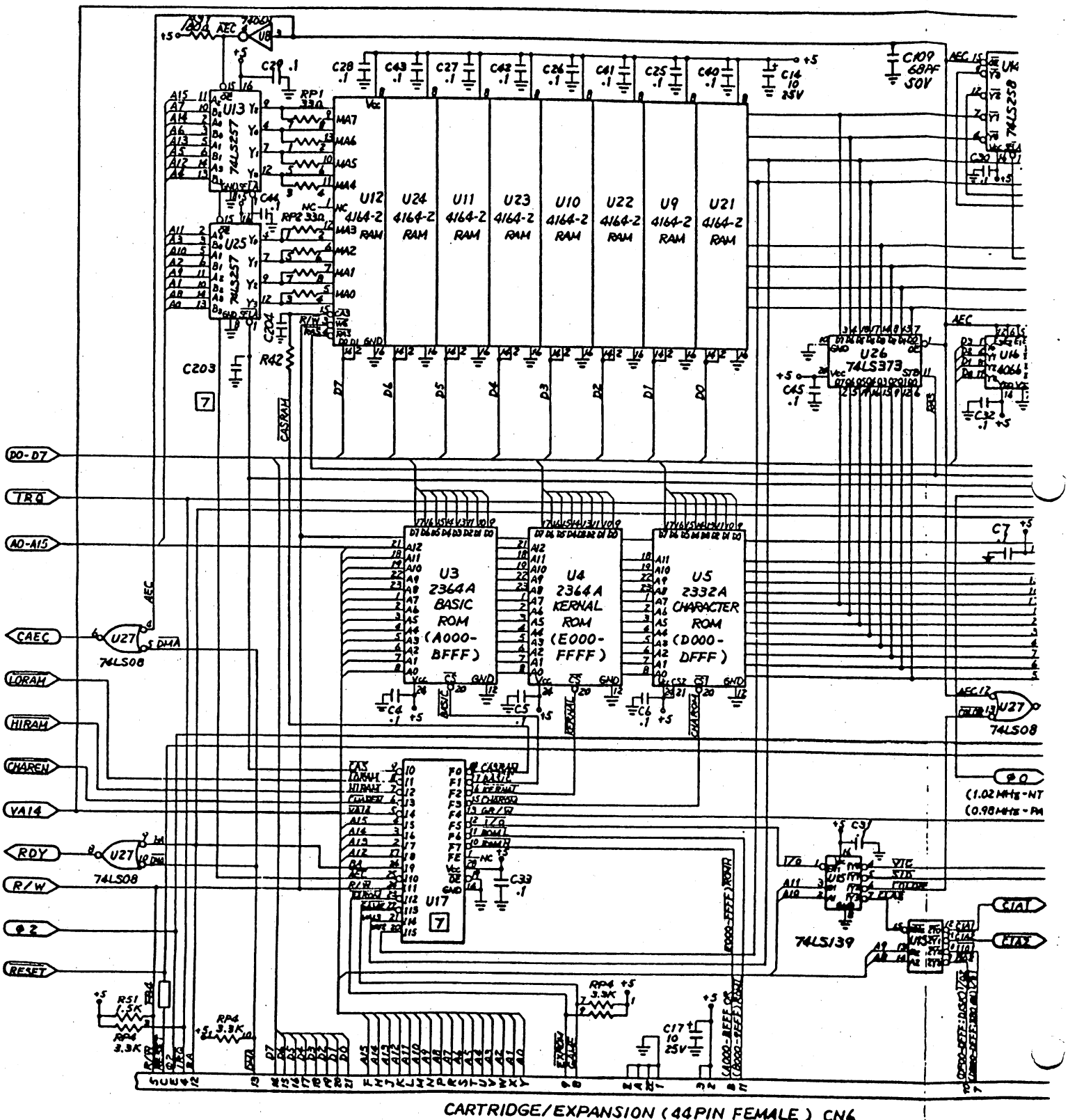
U12
U24 4164-2 RAM
U11 4164-2 RAM
U23 4164-2 RAM
U10 4164-2 RAM
U22 4164-2 RAM
U9 4164-2 RAM
U21 4164-2 RAM
U13 74LS257
U25 74LS257
RP1 330
RP2 330
U26 74LS373
U3 2364A BASIC ROM (A000-BFFF)
U4 2364A KERNAL ROM (E000-FFFF)
U5 2332A CHARACTER ROM (D000-DFFF)
U17
U27 74LS08
U15 74LS139
D0-D7
TRQ
A0-A15
CAEC
LORAM
HIRAM
CHAREN
VA14
RDY
R/W
Φ2
RESET
CASRAM
Φ0 (1.02 MHz-NT (0.98 MHz-PM
CTAT
CTAX
CARTRIDGE/EXPANSION (44PIN FEMALE) CN6

SCHEMATIC #251138 SHEET 1 OF 2

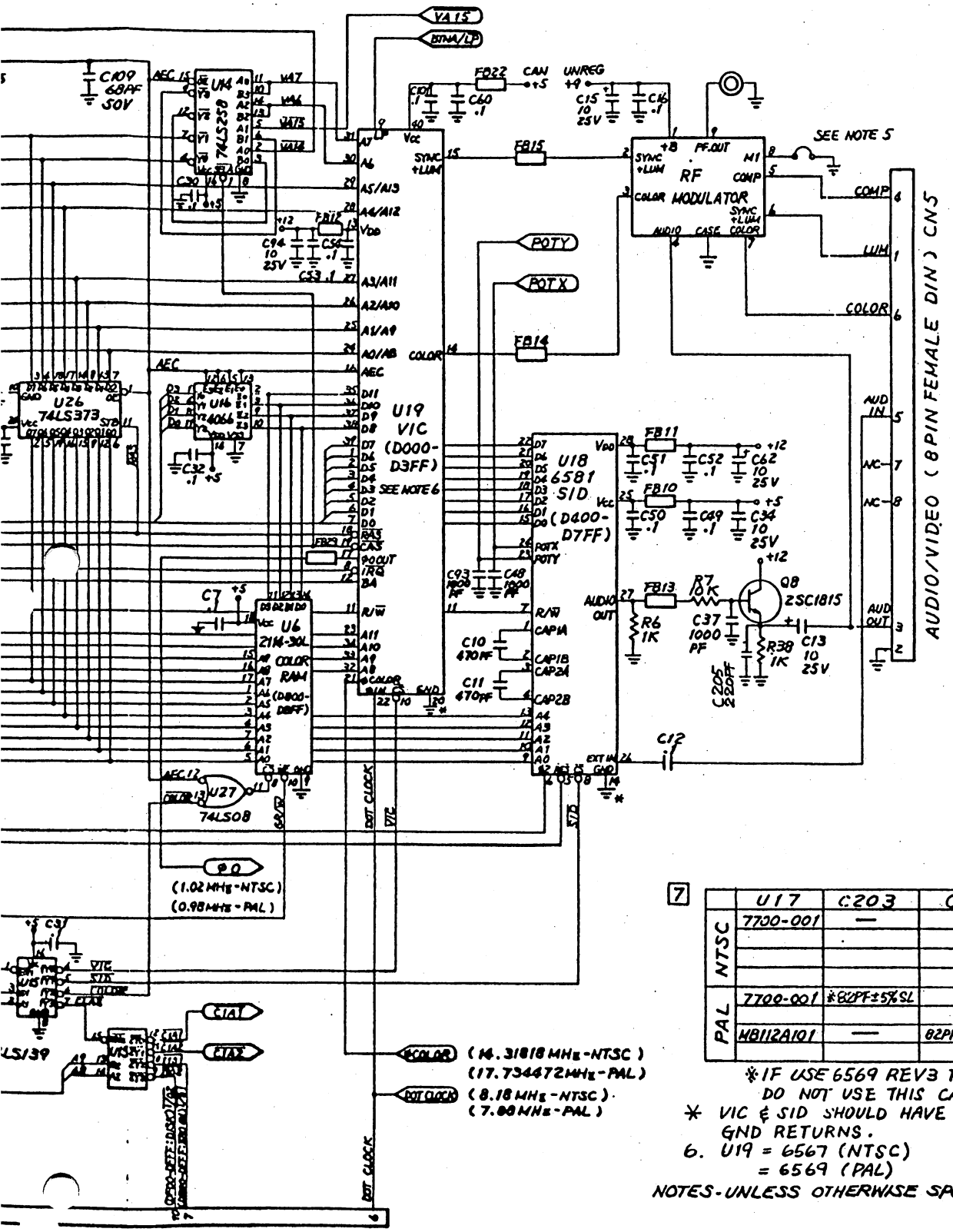

7		U17	C203	C204	R42
	NTSC	7700-001	—	—	82 Ω
	PAL	7700-001	*82PF±5% SL	—	82 Ω
		MB112A101	—	82PF±5% SL	82 Ω

*IF USE 6569 REV3 FOR U19, DO NOT USE THIS CAPACITOR."

* VIC & SID SHOULD HAVE SEPARATE GND RETURNS.

6. U19 = 6567 (NTSC)
   = 6569 (PAL)

NOTES-UNLESS OTHERWISE SPECIFIED:

SCHEMATIC #251138 SHEET 1 OF 2

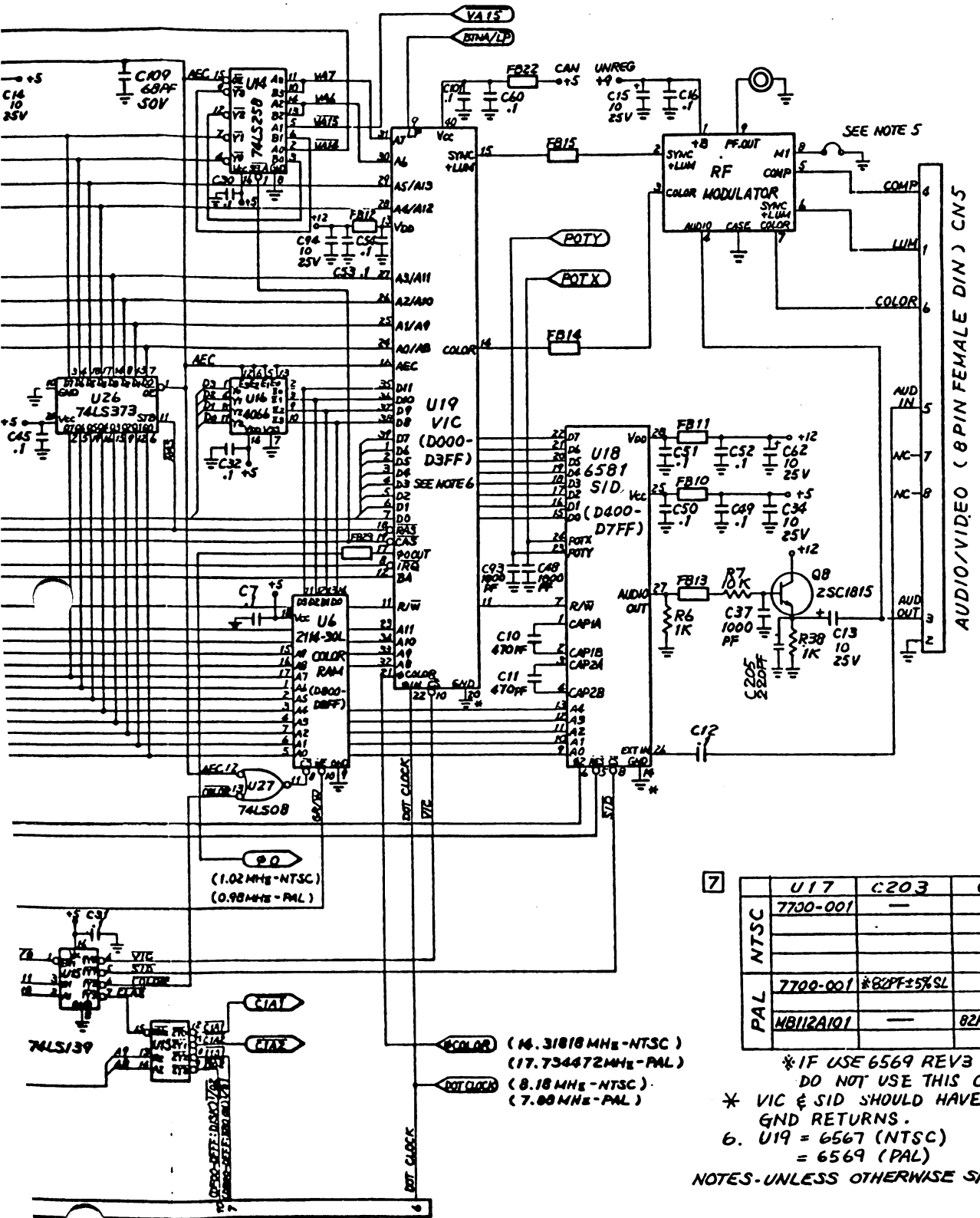

7

	U17	C203	C204	R42
NTSC	7700-001	—	—	82 Ω
PAL	7700-001	*82PF±5% SL	—	82Ω
	MB112A101	—	82PF±5% SL	82 Ω

*IF USE 6569 REV3 FOR U19, DO NOT USE THIS CAPACITOR."

* VIC & SID SHOULD HAVE SEPARATE GND RETURNS.

6. U19 = 6567 (NTSC)
= 6569 (PAL)

NOTES-UNLESS OTHERWISE SPECIFIED:

U7 – 906107-01
6510 MICROPROCESSOR

PIN ASSIGNMENT

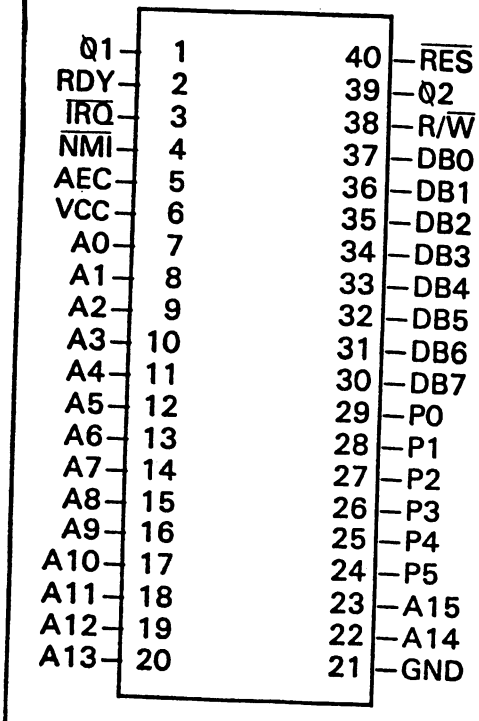

1	Q1	Phase 1 clock input. This clock input is used to develop the internal overlapping phase 2 clock. 1 MegHz or 2 MegHz speeds.
2	RDY	Single step operation input. A low applied will cause the processor to halt. The current address line being fetched will be on the address bus. Can also be used to interface slower devices to the microprocessor.
3	IRQ	Interrupt request input. When a low pulse is applied a jump to a location specified by the contents of FFFE and FFFF will occur to service the interrupt, if the interrupt mask flag is not set. This is a maskable interrupt.
4	NMI	Non-maskable interrupt input. A low transition will cause a jump to a location specified by FFFA and FFFB to a subroutine which will service the interrupt.
5	AEC	Address enable control input. A low applied to will cause the address bus to enter hi impedance state, so other devices can control the address bus.
6	VCC	5VDC input.
7-20 22,23	A0-A15	Address bus outputs. Unidirectional bus used to address memory and I/O devices. The address bus can be disabled by controlling the AEC input.
21	GND	Dc ground connection.
24-29	P0-P5	I/O bidirectional port. This port can be controlled via memory locations 0000 and 0001. 0001 = Output register 0000 = Data direction register
30-37	DB0-DB7	Bidirectional data bus. This is the bus that passes the data to or from any I/O device or memory.
38	R/W	Read/Write output. The processor generates a low level when writing, and a high level when reading. This signal is usually decoded for read or write operations to memory or I/O.
39	02	Phase 2 output. The processor generates this clock signal from the phase 1 clock applied. The two clock signals are 180 degrees out of phase. The phase 2 clock is used in decoding I/O and memory on the positive half cycle.
40	RES	Reset input interrupt. A low pulse causes a jump to a subroutine specified by FFFC and FFFD, which will initialize all processor controlled devices. This occurs during a power up sequence.

PIN ASSIGNMENT

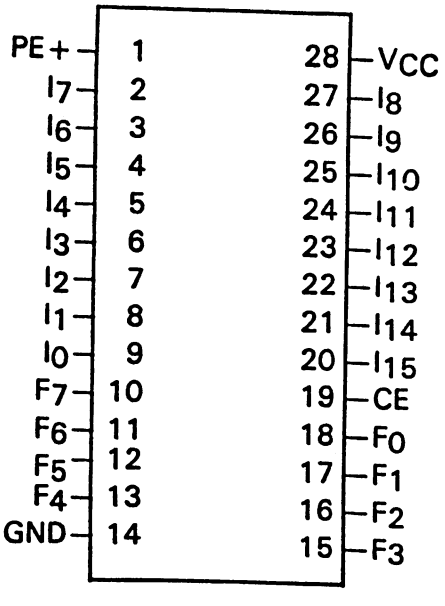

U17 – 906114-01
PROGRAMMABLE LOGIC ARRAY (PLA)

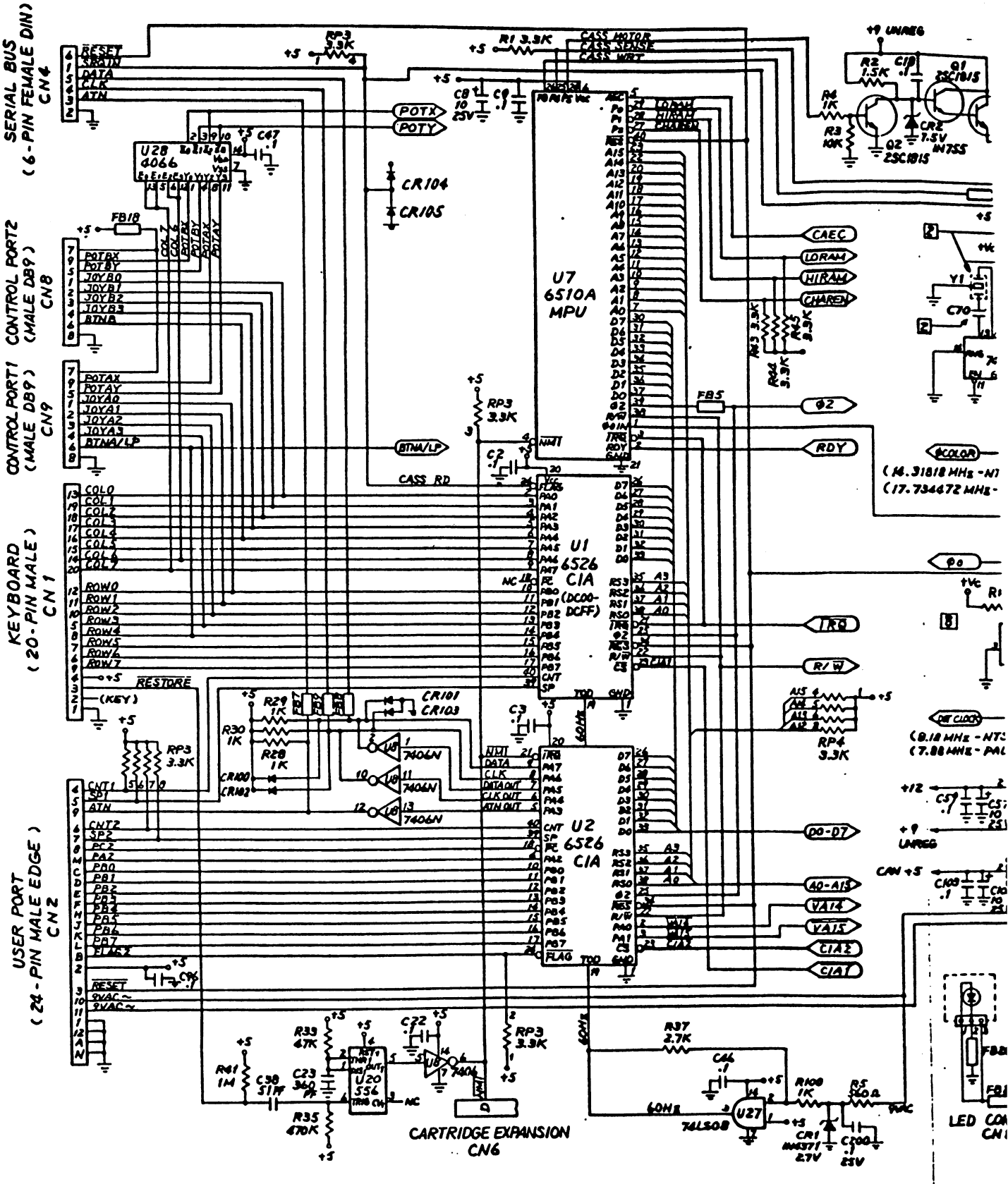
SERIAL BUS (6-PIN FEMALE DIN) CN4
CONTROL PORT2 (MALE DB9) CN8
CONTROL PORT1 (MALE DB9) CN9
KEYBOARD (20-PIN MALE) CN1
USER PORT (24-PIN MALE EDGE) CN2
CARTRIDGE EXPANSION CN6
U7 6510A MPU
U1 6526 CIA
U2 6526 CIA
U28 4066
U20 556
U27 74LS08
7406N
RESTORE
CASS RD
CASS MOTOR
CASS SENSE
CASS WRT
POTX
POTY
CR104
CR105
BTNA/LP
CAEC
LORAM
HIRAM
CHAREN
Φ2
RDY
Φcolor
IRQ
R/W
DW CLOCK
D0-D7
A0-A15
VA14
VA15
CIA2
CIA1
+9 UNREG
(14.31818 MHz - NT
(17.734472 MHz -
(8.18 MHz - NTS
(7.88 MHz - PAL

SCHEMATIC #251138 SHEET 2 OF 2

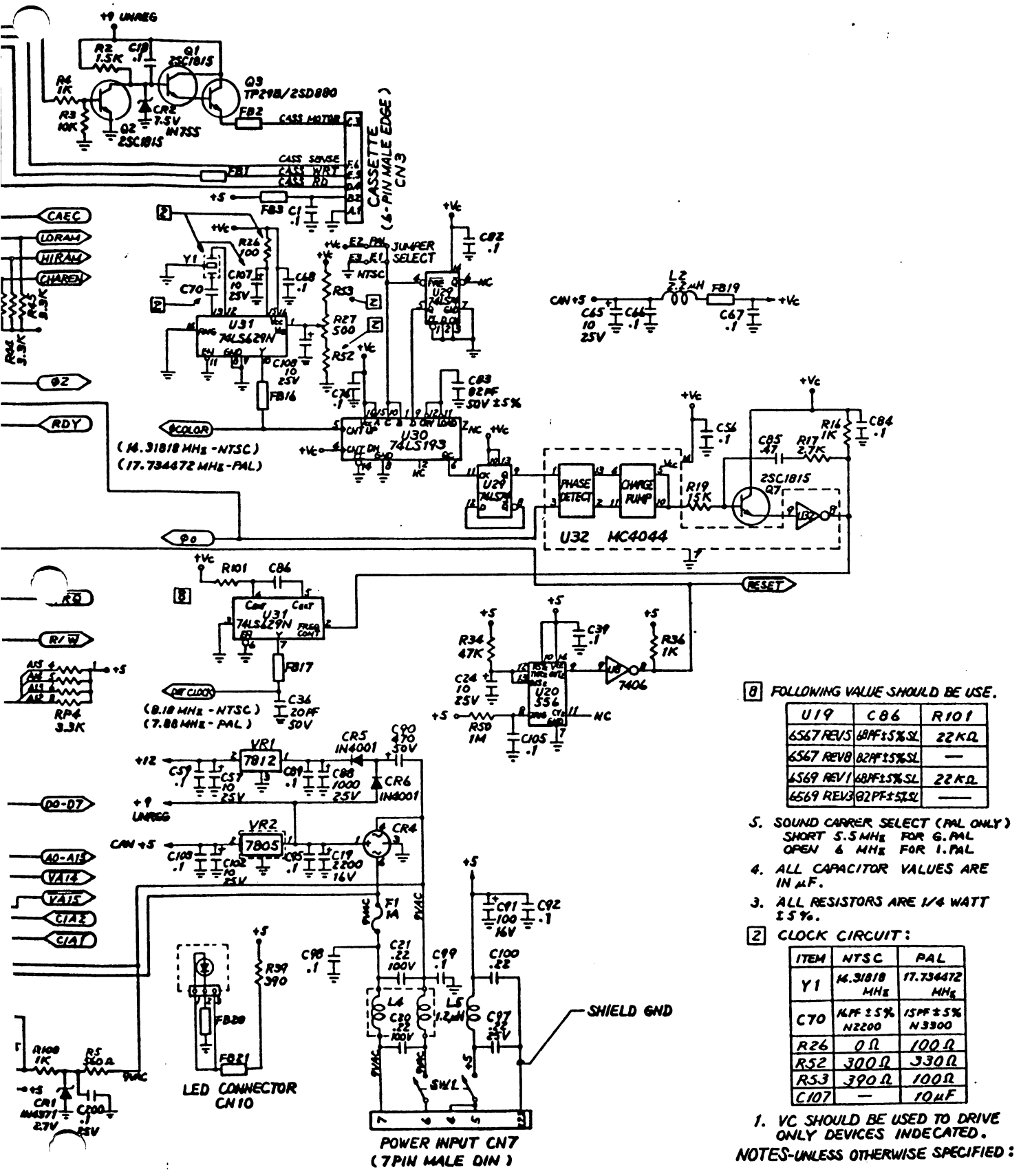

[8] FOLLOWING VALUE SHOULD BE USE.

U19	C86	R101
6567 REV5	68PF±5% SL	22KΩ
6567 REV8	82PF±5% SL	—
6569 REV1	68PF±5% SL	22KΩ
6569 REV3	82PF±5% SL	—

5. SOUND CARRER SELECT (PAL ONLY)
   SHORT 5.5 MHz FOR G.PAL
   OPEN 6 MHz FOR I.PAL
4. ALL CAPACITOR VALUES ARE IN μF.
3. ALL RESISTORS ARE 1/4 WATT ±5%.

[2] CLOCK CIRCUIT:

ITEM	NTSC	PAL
Y1	14.31818 MHz	17.734472 MHz
C70	47PF ±5% N2200	15PF ±5% N3300
R26	0Ω	100Ω
R52	300Ω	330Ω
R53	390Ω	100Ω
C107	—	10μF

1. VC SHOULD BE USED TO DRIVE ONLY DEVICES INDECATED.

NOTES-UNLESS OTHERWISE SPECIFIED:

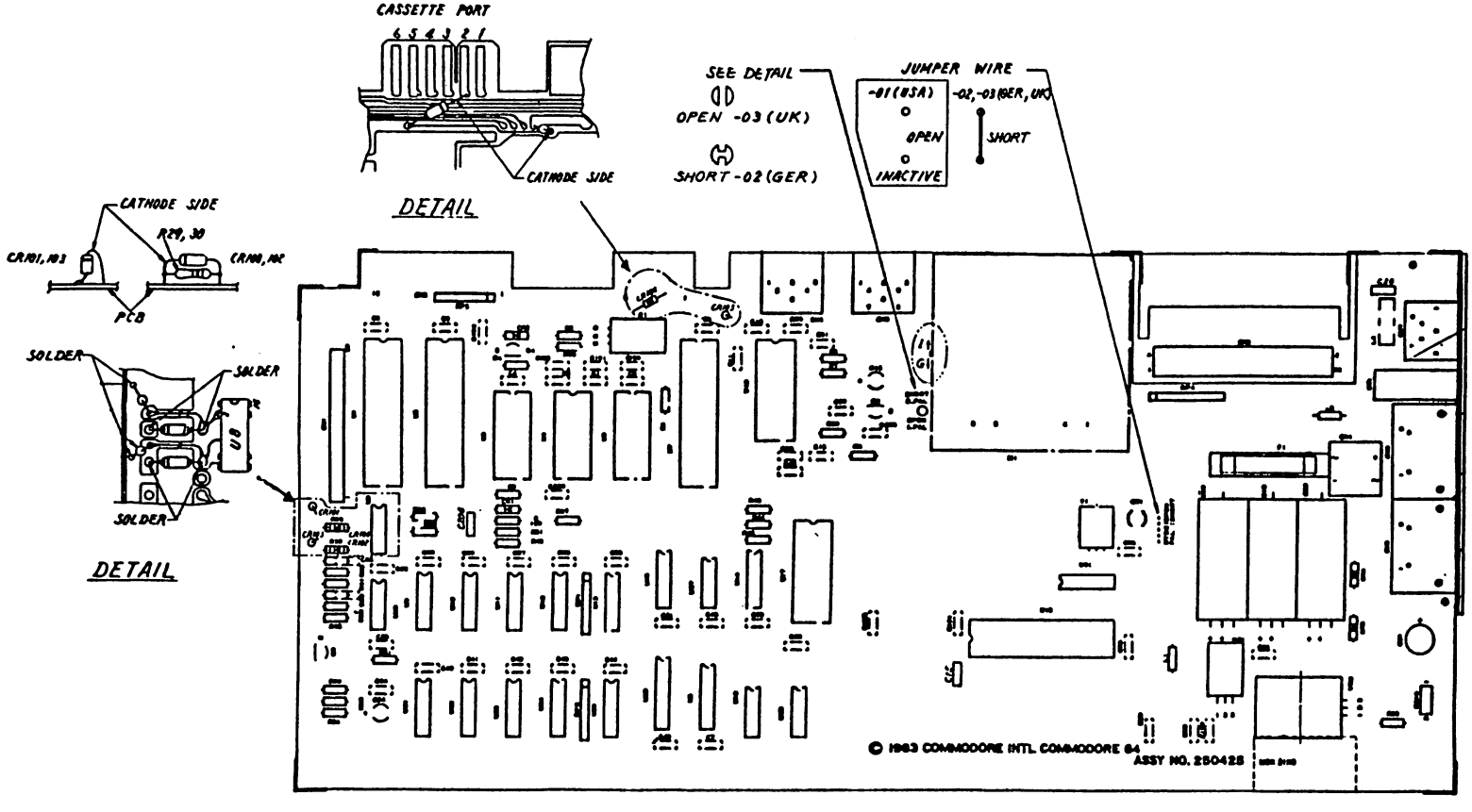

SOUND CARRIER SELECT	MODULATOR				
	NTSC	PAL			
		P/N 251025-01		P/N 251697-01	
		-02 (GER)	-03 (UK)	-02 (GER)	-03 (UK)
JUMPER	DON'T CARE	OPEN	SHORT	DON'T CARE	DON'T CARE
SWITCH	DON'T CARE	DON'T CARE	DON'T CARE	6 POSITION	1 POSITION

DETAIL "C" SOUND CARRIER SELECT

BOARD LAYOUT #250425-01

PARTS LIST — PCB ASSEMBLY #250425-01

C — Indicates Commodore Stocked Part Number

INTEGRATED CIRCUITS		
U1,U2	6526 CIA	C 906108-01
U3	2364 Basic ROM	C 901226-01
U4	2364 Kernal ROM	C 901227-03
U5	2332 Char ROM	C 901225-01
U6	2114L-20 RAM	901453-01
U7	6510 μ Processor	C 906107-01
U8	7406	901522-06 sub:
	7416	901522-14
U9-U12	4164 (200 nS)	901505-01
U13	74LS257	901521-57
U14	74LS258	901521-58
U15	74LS139	901521-18
U16	4066	901502-01
U17	82S100 PLA	C 906114-01
U18	6581 SID	C 906112-01
U19	6567 VIC II	C 906109-04
U20	LM556	901523-03
U21-U24	4164 (200 nS)	901505-01
U25	74LS257	901521-57
U26	74LS373	901521-29
U27	74LS08	901521-03
U28	4066	901502-01
U31	7701/8701	C 251527-01

TRANSISTORS		
Q1	TIP29 A	902653-01
Q2-4	2SC1815	C 902693-01

DIODES		
CR1	2.7V Zener IN4371	906103-02
CR2	6.8V Zener IN754A	
CR4	Bridge S2V310	C 251026-01 sub:
	DBA20B	C 251026-02 sub:
	DBA20C	C 251026-03
CR5,6	Rectifier IN4001	900750-01
CR9, CR12-16, 100-105	IN4148 sub: IN914	

RESISTORS — All values are in ohms- 1/4 W, 5%, unless noted otherwise.

R1	3.3K	R26	3.3K
R2	470	R31	180
R3	100K	R33	47K
R4	1K	R34	47K
R5	560	R35	470K
R6	1K	R37	2.7K
R7	10K	R38	1K

RESISTORS (Continued)			
R39	390	R50	1M
R41	1M	R51	1.5K
R42	82	R60	100
R43	3.3K	R100	1K
R44	3.3K	R101	22K
R45	3.3K		

RESISTOR PACKS	
RP1,2	33Ω, 8 Pin (Bourns No. 4308R-102-330)
RP3	3.3KΩ, 8 Pin (Bourns No. 4308R-101-332)
RP4	3.3KΩ, 10 Pin, 1/4 W
RP5	1KΩ, 6 Pin

CAPACITORS		
C1-7	Ceramic	.1 μF, 25V
C9	Ceramic	.1 μF, 25V
C10,11	Ceramic	470 pF, 50V, 10%
C12	Ceramic	.1 μF, 25V
C13	Electrolytic	10 μF, 25V, +50%, −10%
C15	Tantalum	4.7 μF, 16V, 20%
C19	Electrolytic	2200 μF, 16V
C20	Film	.22 μF, 100V, 20%
C22	Ceramic	.1 μF, 25V
C23	Ceramic	360 pF, 50V, 10% sub: 390 pF
C24	Electrolytic	22 μF, 25V, +50%, −10%
C31,33,34	Ceramic	.1 μF, 25V
C37	Ceramic	1000 pF, 50V, 10% B
C38	Ceramic	51 pF, 50V, 5% SL
C39-46	Ceramic	.1 μF, 25V
C48	Ceramic	1800 pF, 50V, 10% B
C50,51,53	Ceramic	.1 μF, 25V
C59	Ceramic	.1 μF, 25V
C88	Electrolytic	1000 μF, 25V
C90	Electrolytic	470 μF, 50V
C91	Electrolytic	100 μF, 16V, +50%, −10%
C93	Ceramic	1800 pF, 50V, 10% B
C101	Ceramic	.1 μF, 50V, +80%, −20%
C102	Ceramic	.1 μF, 25V
C150-152	Ceramic	470 pF, 50V, 10%
C153	Ceramic	68 pF, 50V, 5%
C154	Ceramic	470 pF, 50V, 10%
C200	Ceramic	.1 μF, 25V
C204	Ceramic	150 pF, 50V, 10%
C205	Ceramic	220 pF, 50V, 5%
CT1	Trimmer	40 pF

PARTS LIST — PCB ASSEMBLY #250425-01 (Continued)

C — Indicates Commodore Stocked Part Number

CONNECTORS		
CN1	Header Assy, 20 Pin	903331-20
CN4	6 Pin Din	C 903361-01
CN5	8 Pin Din	C 325573-01
CN6	44 Pin Card Edge	C 906100-02
CN7	7 Pin Din	C 251116-01
CN8,9	Plug Assy, 9 Pin MINID	C 251057-01
CN10	Header Assy, 3 Pin	903332-03

MISCELLANEOUS		
L1	Coil Inductor 2.2 μH	901151-17
L4	Line Filter Assy	C 251701-01
L5	Coil Inductor 1.2 μH	901152-01
Y1	Crystal 14.31818 MHz	C 251467-01

MISCELLANEOUS (Continued)		
SW1	Rocker Switch DPDT	904500-01
VR1	Voltage Regulator MC7812CT	901527-01
VR2	Voltage Regulator MC7805CT	901527-02
M1	Modulator	C 251696-01
	Connector Panel (Power, ON, OFF)	251095-01
	Cartridge Guide	326116-01
F1	Fuse, Normal Blo, 250V, 1.5A	

MODULATOR SCHEMATIC #251696

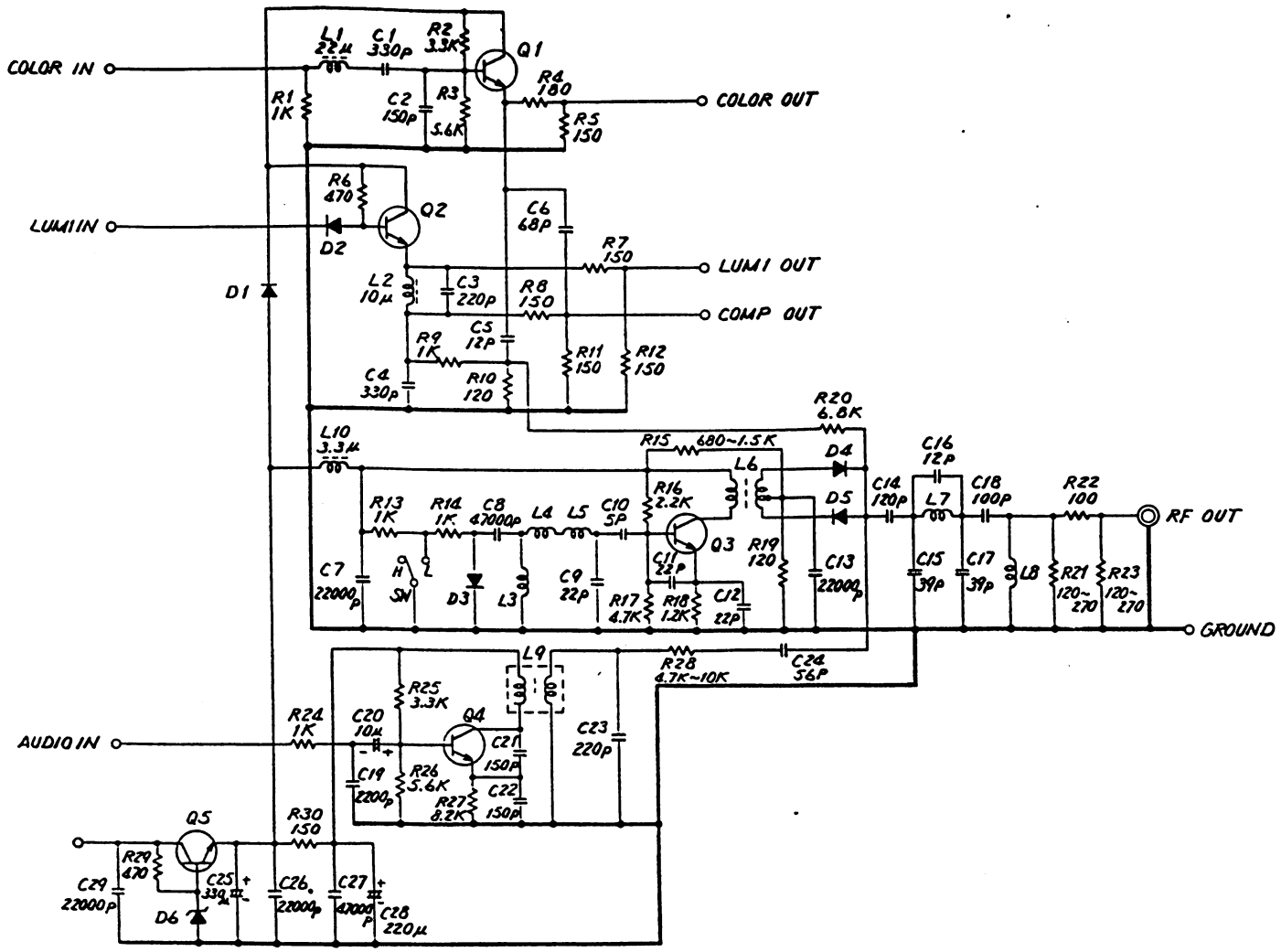

NOTES

1. D1, D2 : MA151K OR EQUIVALENT
2. D3 : MA57 OR EQUIVALENT
3. D4, D5 : 1SS198 OR EQUIVALENT
4. D6 : HZ-7A1 OR EQUIVALENT
5. Q1, Q2 : 2SC2405 OR EQUIVALENT
6. Q3, Q4 : 2SC 2778 OR EQUIVALENT
7. Q5 : 2SC2120Y OR EQUIVALENT
8. COMPONENT PARTS VALUE : R = Ω, C = F, L = H

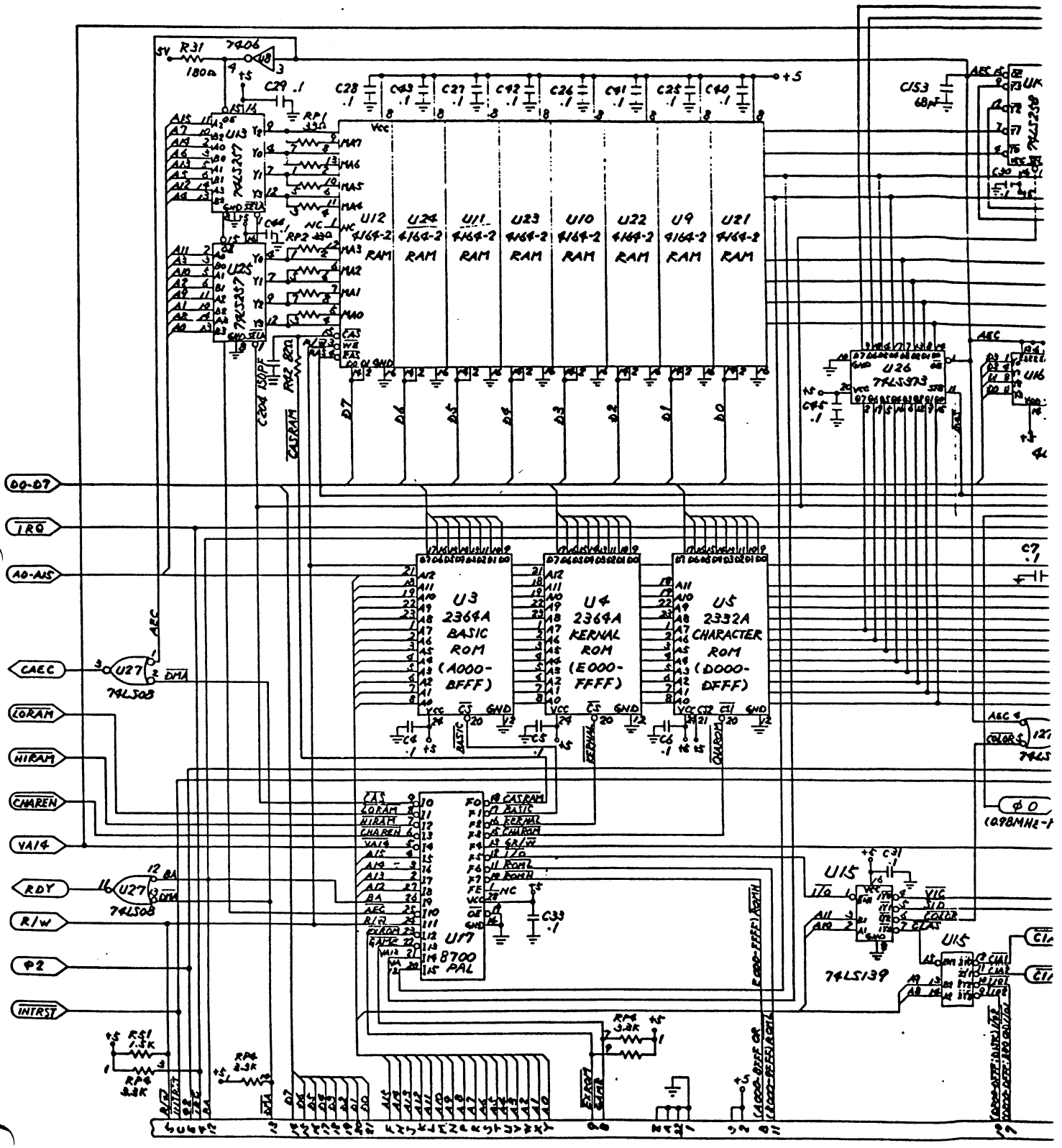
U12 4164-2 RAM
U24 4164-2 RAM
U11 4164-2 RAM
U23 4164-2 RAM
U10 4164-2 RAM
U22 4164-2 RAM
U9 4164-2 RAM
U21 4164-2 RAM
U3 2364A BASIC ROM (A000-BFFF)
U4 2364A KERNAL ROM (E000-FFFF)
U5 2332A CHARACTER ROM (D000-DFFF)
U17 8700 PAL
U26 74LS373
U15 74LS139
U27 74LS08
U13 74LS257
U25 74LS257
R31 180Ω
RP1 33Ω
RP2 220Ω
RP3 82Ω
RP4 3.3K
RP5 3.3K
RP6 3.3K
R51 1.5K
C29 .1
C28 .1
C43 .1
C27 .1
C42 .1
C26 .1
C41 .1
C25 .1
C40 .1
C153 68pF
C30 150PF
C44 NC
C31 .1
C33 .1
C5 .1
C6 .1
C7 .1
CASRAM
BASIC
KERNAL
CHAREN
I/O
ROMH
ROML
GAME
EXROM
DMA
BA
AEC
R/W
VA14
LORAM
HIRAM
D0-D7
IRQ
A0-A15
CAEC
RDY
R/W
Φ2
INTRST
Φ0 (0.98MHz-1
CARTRIDGE/EXPANSION (44PIN FEMALE) CN6

SCHEMATIC #251469 SHEET 1 OF 2

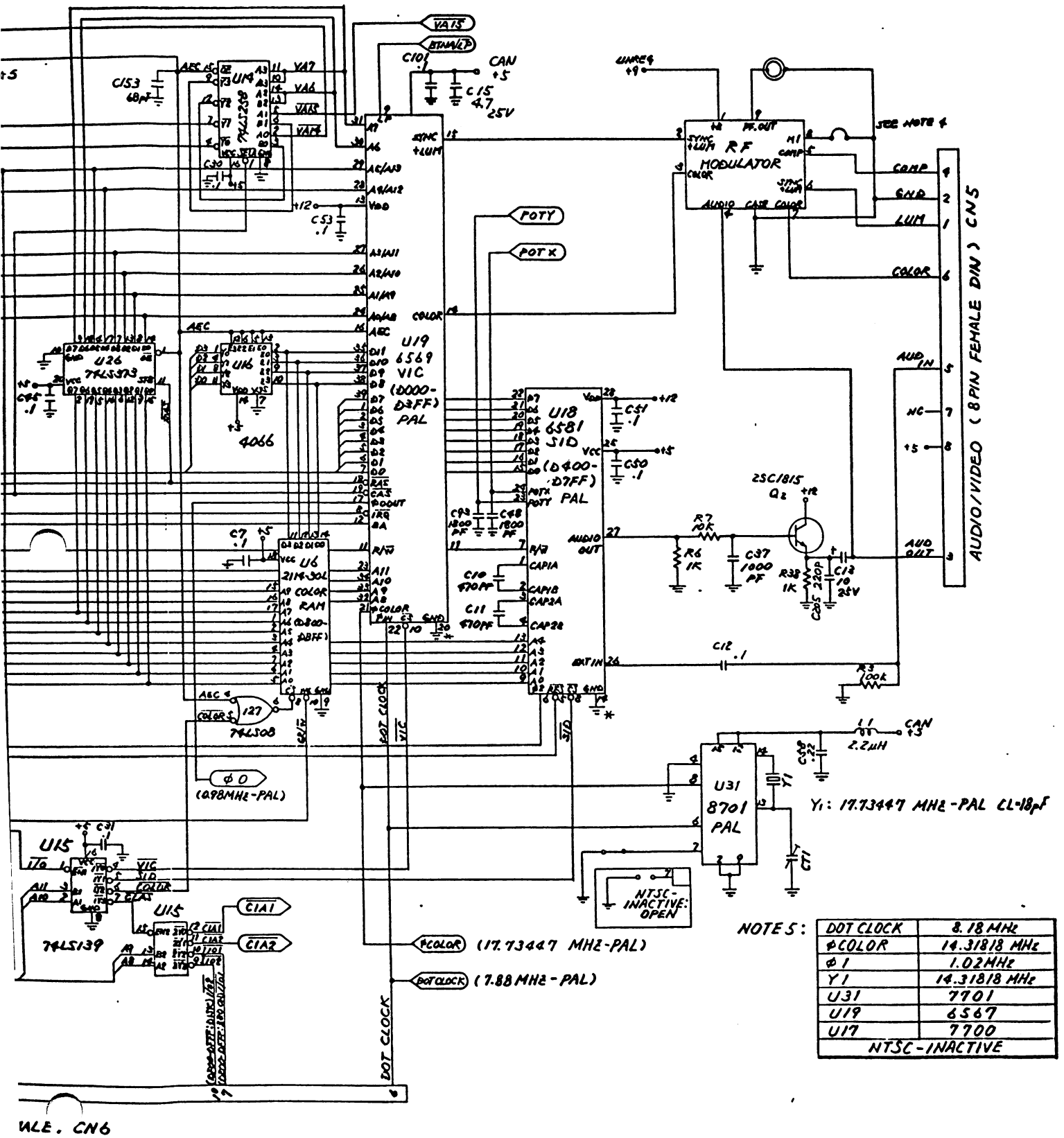

NOTES:

DOT CLOCK	8.18 MHz
ΦCOLOR	14.31818 MHz
Φ1	1.02 MHz
Y1	14.31818 MHz
U31	7701
U19	6567
U17	7700
NTSC-INACTIVE	

PIN ASSIGNMENT

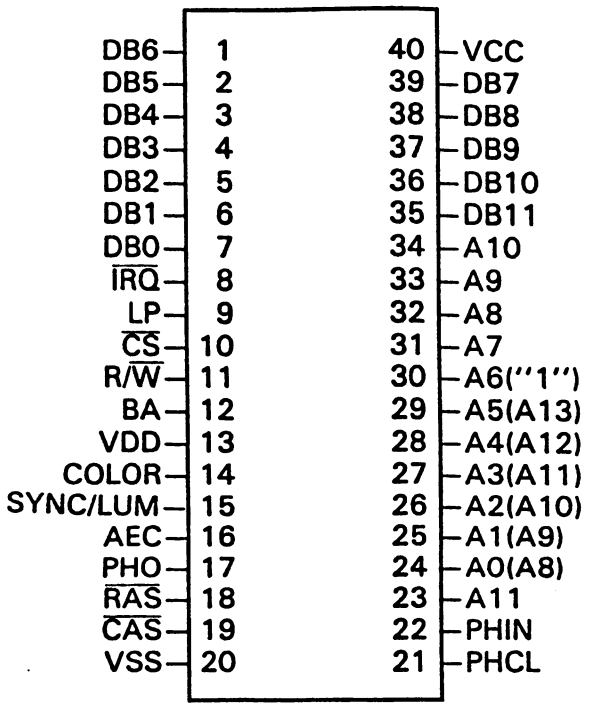

U19 – 906109-01
MULTIPLEXED
ADDRESSES IN PARENTHESES

1-7/39	DB0-DB7	Processor data bus connections. Bidirectional data.
8	IRQ	Interrupt output. Generates a interrupt signal to the processor indicating service is needed. The light pen input can be acknowledged thru use of this interrupt.
10	CS	Chip select input. A low signal selects the VIC 11.
11	R/W	Processor read/write connection.
12	BA	Bus available output. A low pulse output indicates the VIC 11 chip wants controls of the processor network to process faster video operations that the system clock can handle.
13	VDD	12VDC input.
14	COLOR	Output contains chrominance, color reference burst, and color of display data.
15	SYNC/ LUM	Output containing video, horizontal and vertical sync, and luminance information.
16	AEC	Address enable output. This is usually connected to the processor AEC input, controlling the address bus. AEC = 0 processor address bus disabled, refresh ram. AEC = 1 processor address bus enabled. This allows transparent refresh operations.
17	PH0	Phase 0 output. Generated from the phase in signal.
18	RAS	Row address strobe output. Selects proper row when addressing dynamic ram for read/write operations or refresh.
19	CAS	Column address strobe output. Selects proper column when addressing dynamic memory for read or write operation.
20	VSS	Ground connection.
21	PHCL	Color clock, 14.31818 MHZ NTSC.
22	PHIN	Clock input. Determines the dot transfer rate to the display.
23-24	A0-A13	Dual function address bus. During a microprocessor read or write operation (AEC = 1), A0 thru A5 are inputs used to address 47 internal registers. When AEC = 0 = 02 is low, then A0 thru A13 are outputs used to refresh dynamic memory.
35-38	D8-D11	Data bus extension. Color display memory data.
	A8-A11	Address bus extension. Color display memory addressing.
40	VCC	5VDC input.

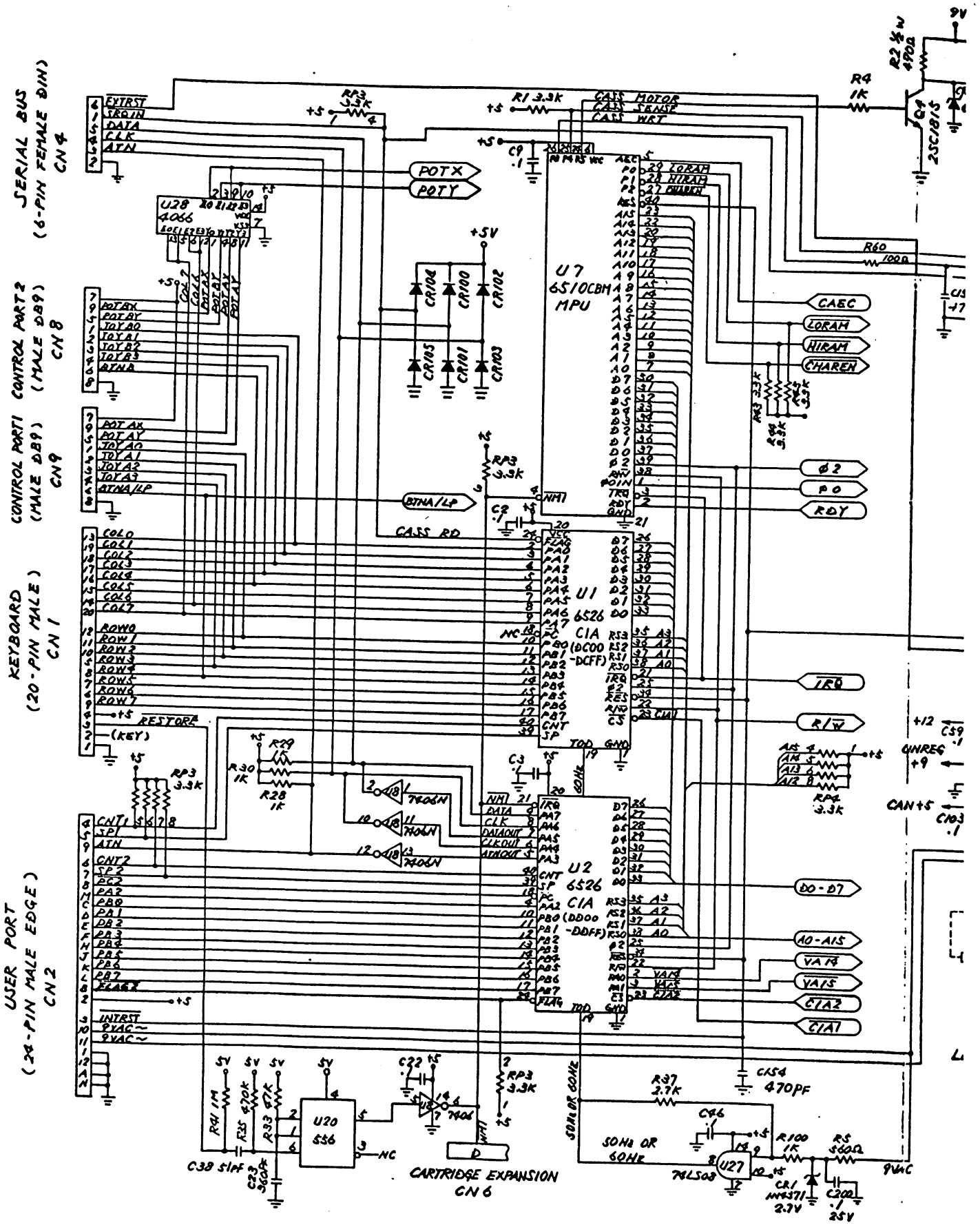
SERIAL BUS (6-PIN FEMALE DIN) CN4
CONTROL PORT2 (MALE DB9) CN8
CONTROL PORT1 (MALE DB9) CN9
KEYBOARD (20-PIN MALE) CN1
USER PORT (24-PIN MALE EDGE) CN2
CARTRIDGE EXPANSION CN6
U7 6510CBM MPU
U1 6526 CIA (DC00 -DCFF)
U2 6526 CIA (DD00 -DDFF)
U28 4066
U20 556
U27 74LS08
POTX
POTY
CASS RD
CASS MOTOR
CASS SENSE
CASS WRT
RESTORE
CAEC
LORAM
HIRAM
CHAREN
Ø2
R/W
IRQ
D0-D7
A0-A15
VA14
VA15
CIA2
CIA1
470PF

SCHEMATIC #251469 SHEET 2 OF 2

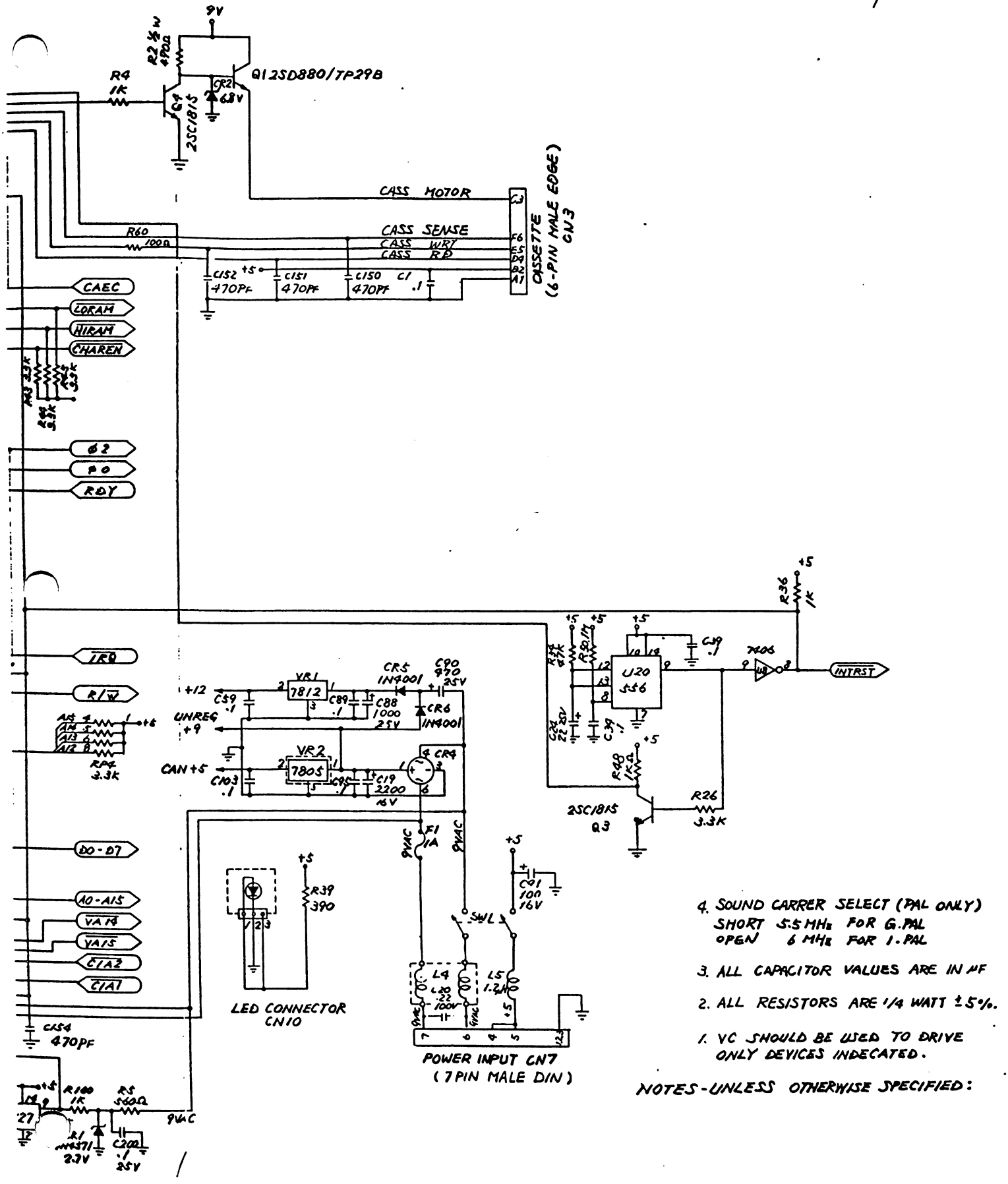

4. SOUND CARRER SELECT (PAL ONLY)
   SHORT 5.5 MHz FOR G.PAL
   OPEN 6 MHz FOR I. PAL
3. ALL CAPACITOR VALUES ARE IN MF
2. ALL RESISTORS ARE 1/4 WATT ±5%.
1. VC SHOULD BE USED TO DRIVE ONLY DEVICES INDECATED.

NOTES - UNLESS OTHERWISE SPECIFIED:

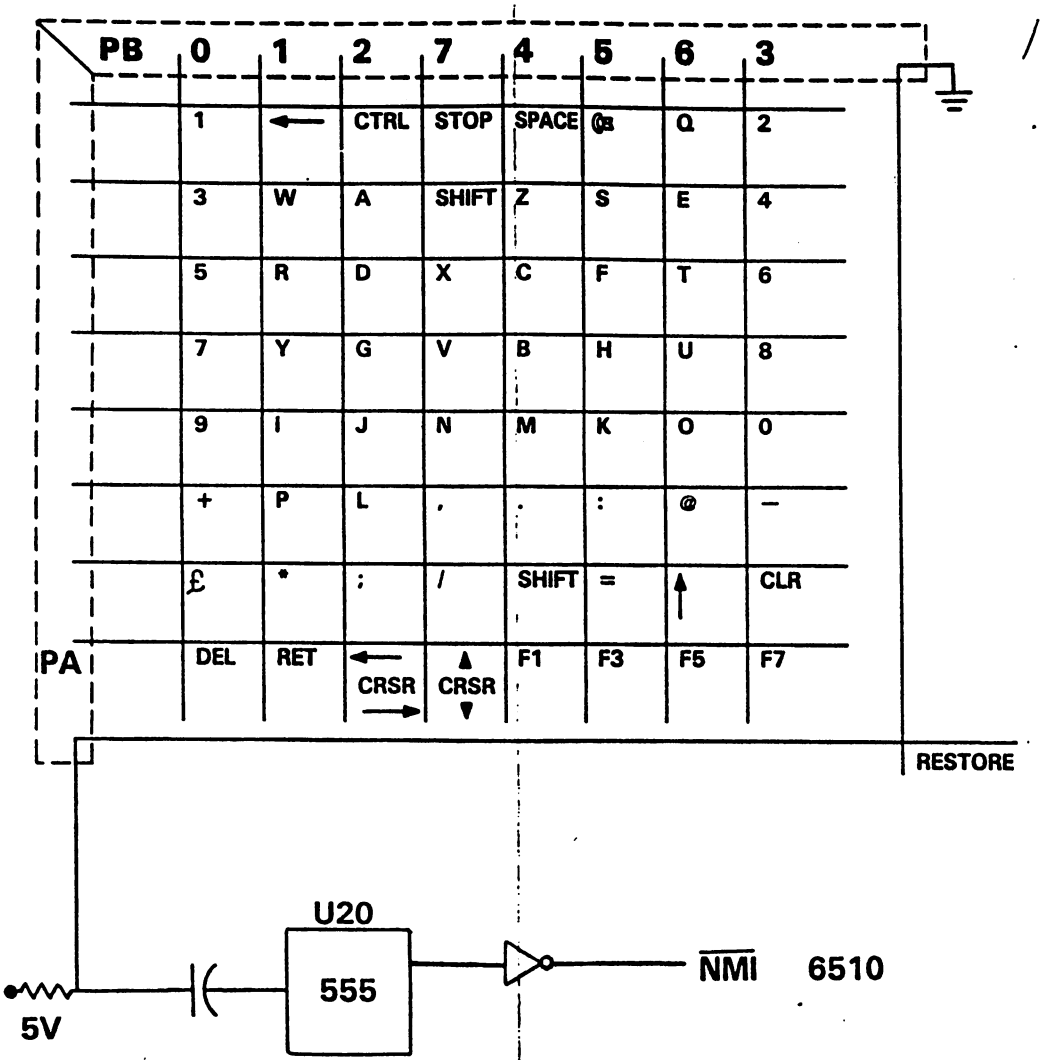

KEYBOARD MATRIX

Joystick Interface.

U1 also controls the joystick. Parallel port A accepts inputs from the B joystick connected to control port 2. Parallel port B accepts inputs from the A joystick connected to control port 1. When the joystick is moved up, down, left, right, or the fire button is depressed, a ground potential is applied to the appropriate input of U1.

Paddle Interface.

A Variable resistor is connected to adjusting knob on the paddle. When the knob is rotated, the resistance varies controlling the time constant of an RC network. The Voltage developed across the capacitor is input to an A/D converter internal to the SID chip U18. The digital output is stored in one of the SID registers. The paddle position can be determined by the reading the contents of the appropriate register. U28 is a 4066 CMOS switch. The signals from the paddles are passed to the SID chip when the Enable inputs (E0 - E3) of U28 are "high".

NOTE: U1 port assignments are incorrect on schematics. Refer to Keyboard Matrix for correct assignments.

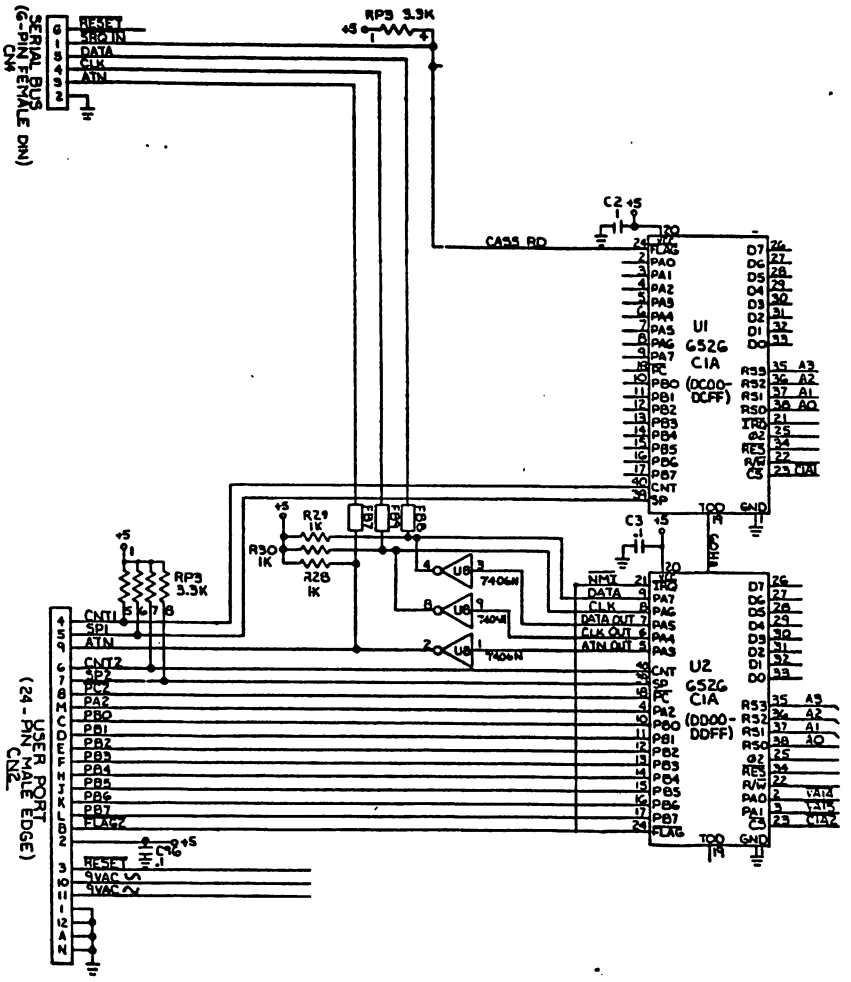

The Serial Interface and User Port Circuits.

The Serial Interface.

U2 is a Complex Interface Adapter (CIA). Parallel port signals PA3-PA7 control the serial bus interface. PA3 is the Attention (ATN) output. This signal is inverted by U8 before being transmitted to a device on the bus. PA4 is the Clock output. Data transmitted from the C64 to a device on the bus is synchronized by this clock signal. U8 inverts the output PA4. PA5 is the data output. U8 inverts this output also. Data transmitted from a device on the bus to the C64 is synchronized by a clock generated by the transmitting device. The Clock signal is input on PA6. Data transmitted from a device on the bus to the C64 is input on PA7. When a device on the bus wants to communicate with the C64, SRQ IN goes "low" indicating service is requested.

The User Port.

Parallel port B of U2 (PB0 - PB7) is made available on the user port. Parallel data transfers with external devices are made very easily through this parallel port. SP2 and SP1 are bi-directional serial ports. CNT1 and CNT2 are bi-directional synchronizing clock signals for each serial port.

64 TROUBLESHOOTING GUIDE

SYMPTOM	POSSIBLE SOLUTION
Blank screen on power up.	Check External Power Supply U4 (KERNAL ROM), U17 (PLA) U7 (6510 MPU), U3 (ROM) U8 (7406 IC), U19 (VIC II) U9-U12 (4164 RAM) U21-U24 (4164 RAM) VR2, CR4, VR1
Out of memory error on power up.	Check U9-U12 (4164 RAM) U21-U24 (4164 RAM) **** USE DIAGNOSTIC TEST — DISK
No cursor displayed. Intermittent blank screen.	Check U1, U15, U7 Check U2, U7
Powers up with graphic display and blinking cursor.	Check U14 (74LS258 IC)
Powers up with all the characters displayed as blocks.	Check U26 (74LS373 IC)
Intermittent display.	Check C88 (Possible Bad Connection)
Powers up with 'PRESS PLAY ON TAPE' message and the display blanks.	Check U7 (6510 MPU) R1 (Possible Bad Connection)
On power up the cursor locks up.	Check U7 (6510 MPU) U20 (556 IC)
When 'RETURN' is pressed after a run command, the cursor goes back to home position.	Check U3 (ROM)
Poke command does not work.	Check U3 (ROM)
Joystick does not operate correctly.	Check U1, U28 (6526 CIA)
Wrong frequency.	Check C70
No character lettering is displayed on the screen.	Check U3 (ROM) U2 (CIA)
Graphic characters instead of letters displayed.	Check U19 (VIC II)
Power up message appears but no cursor.	Check U1, U15, U7 and U4

64 TROUBLESHOOTING GUIDE (Continued)

SYMPTOM	POSSIBLE SOLUTION
Cursor jumps back to home position.	Check U7 (6510 MPU)
Abnormal colors appear in the letters.	Check U6 (2114 RAM) U16 (4066 IC)
Different characters are displayed and cursor is locked when turned on and off.	Check RAM
System does not reset and the 'RESTORE' key does not work.	Check U20 (556 IC)
White band scrolls down the screen. (60 HZ HUM)	Check External Power Supply VR2 (5V Regulator)
Cursor disappears after the system warms up.	Check U1 (6526 CIA)
SYNTAX ERROR displayed after system warms up.	Check RAM, U3 (ROM)
Wavy screen after the system warms up.	Check External Power Supply U31 (74LS629 IC) U30 (74LS193 IC)
The system resets when it warms up and long programs do not load.	Check U7 (6510 MPU) U3 (ROM)
Keyboard does not operate correctly when the system warms up.	Check U1 (6526 CIA) U3 (ROM)
Black band scrolls through screen when system warms up.	Check External Power Supply C90, C88, CR4 VR2 (5V Regulator)
Cassette motor keeps running.	Check U7 (6510 MPU)
Cassette motor keeps running even after a program is done loading. The TIP 29 transistor gets extremely hot and the fuse may possibly blow.	Check Cassette Port for Shorts R4 (Possibly Open)
The cursor disappears when the cassette is plugged in.	Check U7 (6510 MPU)
Cassette runs extremely slow. The program seems to load but will not run.	Check U7 (6510 MPU)

64 TROUBLESHOOTING GUIDE (Continued)

SYMPTOM	POSSIBLE SOLUTION
When loading from a cassette, the 'SYNTAX ERROR' message is displayed.	Check U20 (556 IC)
DEVICE NOT PRESENT ERROR is displayed when disk is used.	Check U1 (6526 CIA) U7 (6510 MPU) R28, R29, R30
Disk drives continue to search when trying to load.	Check U2 (6526 CIA)
When loading from disk and any key of the 4th row of the keyboard is pressed, the cursor goes to home position.	Check U20 (556 IC) R35 (Possible Bad Connection)
When loading from disk, a 'FILE NOT FOUND' message is displayed.	Check U4 (ROM) U2 (6526 CIA)
OUT OF MEMORY ERROR is displayed when disk is used.	Check U20 (556 IC)

C64 BOARD IDENTIFICATION

To date there are 4 versions of 64 PCB assemblies in use.

VERSION	IDENTIFYING FACTORS	PCB ASSY #	SCHEMATIC #
Original	5 pin board (CN5-Video port has 5 pins)	326298-01	326106
A (CR)	8 pin board (CN5-Video port has 8 pins)	250407-04	251138
B	8 pin board (Reduced oscillator circuit)	250425	251469
B-2	8 pin board (Reduced Osc. w/component changes)	250441-01*	251469

— These boards are interchangeable with casework, keyboard, etc.; however, care must be taken to provide the customer with a unit that is compatible with their monitor and cable.

— When component level repairs are necessary, be certain to acquire the appropriate part for the board you are repairing. Most modulators are different, as are many of the other components.

*The 4th version of 64 board was recently developed and only a few may be in the field. It is termed the 64B-2. All circuits remain the same as the 64B (Schematic 251469) with a few component location changes:

1) Resistors 28, 29, 30, 36, 48 were reduced to Resistor Pack RP5.

2) Diodes CR100-105 are no longer piggybacked. Their new locations are CR9, 12-16.

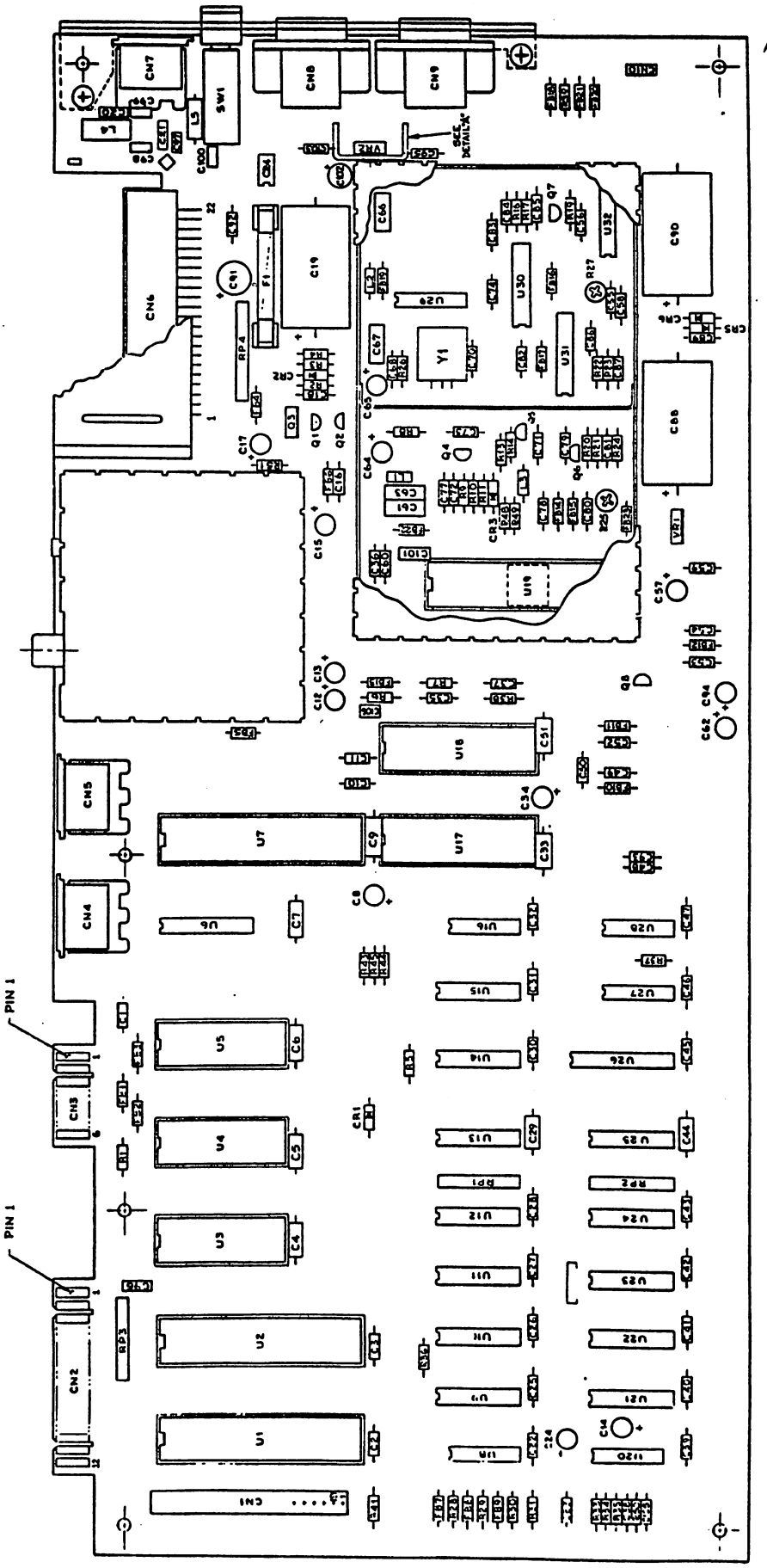

BOARD LAYOUT #326298-01

PARTS LIST — PCB ASSEMBLY #326298

C — Indicates Commodore Stocked Part Numbers

INTEGRATED CIRCUITS		
U1,U2	6526 CIA	C 906108-01
U3	2364 Basic ROM	C 901226-01
U4	2364 Kernal ROM	C 901227-03
U5	2332 Char ROM	C 901225-01
U6	2114L-30 RAM	901453-01
U7	6510 μ Processor	C 906107-01
U8	7406	901522-06
U9-U12	4164 (200 nS)	901505-01
U13	74LS257	901521-57
U14	74LS258	901521-58
U15	74LS139	901521-18
U16	4066	901502-01
U17	82S100 PLA	C 906114-01
U18	6581 SID	C 906112-01
U19	6567 VIC II	C 906109-04
U20	LM556	901523-03
U21-U24	4164 (200 nS)	901505-01
U25	74LS257	901521-57
U26	74LS373	901521-29
U27	74LS08	901521-03
U28	4066	901502-01
U29	74LS74	901521-06
U30	74LS193	901521-26
U31	74LS629	901521-68
U32	MC4044	906128-01

TRANSISTORS		
Q1	2N4401	902652-01
Q2	2N3904	902658-01
Q3	TIP29 B	902653-01
Q4-8	2N2222	902686-01

DIODES		
CR1	2.7V Zener IN4371	
CR2	7.5V Zener IN755	
CR3	IN914	
CR4	Bridge, Varo VM08	906129-01
CR5,6	Rectifier IN4001	

RESISTORS — All values are in ohms- 1/4 W, 5%, unless noted otherwise.

R1	3.3K	R7	10K
R2	1.5K	R8	390
R3	10K	R9	75
R4	1K	R10	120
R5	560	R11	120
R6	1K	R13	1K

RESISTORS (Continued)			
R14	100	R30	1K
R16	1K	R31	180
R17	1.2K	R33	47K
R19	15K	R34	47K
R20	6.8K	R35	470K
R21	4.7K	R37	2.7K
R22	1.5K	R38	1K
R23	1K	R39	390
R24	3.3K	R41	1M
R25	Pot 1K	R43	3.3K
R26	75	R44	3.3K
R27	Pot 2K	R45	3.3K
R28	1K	R46	2K
R29	1K	R51	1.5K

NOTE: The input video line requires a 470 ohm, 1/4 watt, resistor soldered to ground.

RESISTOR PACKS	
RP1,2	33Ω, 8 Pin (Bourns No. 4308R-102-330)
RP3	3.3KΩ, 8 Pin (Bourns No. 4308R-101-332)
RP4	3.3KΩ, 10 Pin

CAPACITORS		
C1-3	Ceramic	.1 μF, 50V
C4-7	Ceramic	.47 μF, 50V, 20%
C8	Electrolytic	10 μF, 25V, +50%, −10%
C9	Ceramic	.47 μF, 50V, 20%
C10,11	Ceramic	470 pF, 50V
C12-15	Electrolytic	10 μF, 25V, +50%, −10%
C16	Ceramic	.1 μF, 50V
C17	Electrolytic	10 μF, 25V, +50%, −10%
C18	Ceramic	.1 μF, 50V
C19	Electrolytic	2200 μF, 16V
C20,21	Film	.22 μF, 100V, 20%
C22	Ceramic	.1 μF, 50V
C23	Ceramic	360 pF, 50V
C24	Electrolytic	10 μF, 25V, +50%, −10%
C25-28	Ceramic	.22 μF, 50V
C29	Ceramic	.47 μF, 50V, 20%
C30,31,32	Ceramic	.1 μF, 50V
C33	Ceramic	.47 μF, 50V, 20%
C34	Electrolytic	10 μF, 25V, +50%, −10%
C35	Ceramic	.1 μF, 50V
C36	Ceramic	20 pF, 50V
C37	Ceramic	1000 pF, 50V

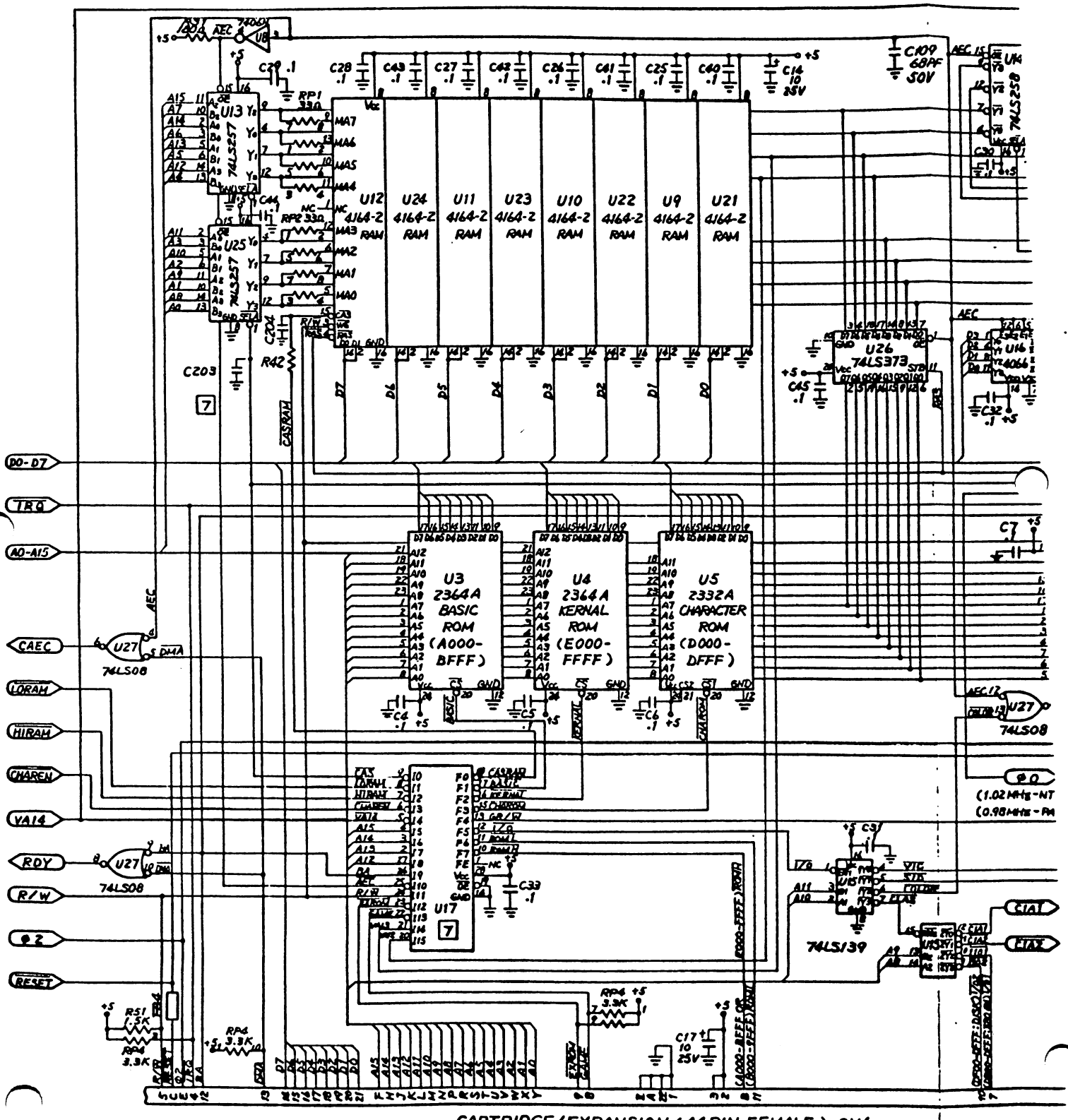

CARTRIDGE/EXPANSION (44PIN FEMALE) CN6